SERIES C1400

- Input voltage 230VAC
- 15A rms peak phase current
- Integrated Line Filter
- For LinMot P10 Linearmotors & AC servomotors
- Integrated Cooling Fan
- 100 programmable motion profiles
- 255 storable motion commands
- Interface for incremental or absolute sensors

Servo Drive Series C1400

Series C1400 Servo Drives are modular axis drives, with 32-bit position resolution and an integrated power stage 1x240VAC, for linear motors and rotary motors.

The drives are suitable for simplest, standard, and high-end positioning tasks.

CONNECTION TO MACHINE DRIVE

The Series C1400 Servo Drives can be actuated by machine controls from many manufacturers or brands, via digital inputs and outputs, or industrial ETHERNET.

PROCESS AND SAFETY INTERFACES

Fast process interfaces for direct processing of sensor signals are available as freely programmable analog and digital inputs, a fast trigger input, and a capture input.

The safety IO's on Servo Drives with the -1S option with industrial ETHERNET allows safe torque off (STO) of the drives via control signals, without interrupting the power supply.

LOGIC AND POWER SUPPLY

In an E-stop and safe stop of the drive, only the motor power supply is cut off from the drive. The logic supply and the drive continue to run.

This has the advantage that the drive and linear motor do not need to be reinitialized when the machine is restarted, since all process data, including the position of the linear motor are still up to date (as long as the logic supply is not turned off).

System Integration

Flexible hardware enables control of any 1/2/3- phase motors. Thus, low-power rotary servomotors, such as brushless DC motors, can be integrated in the same controls concept.

Additionally, the drives can be equipped with optional peripherals, such as reference and end stop switches, high-precision external position sensors, or a mechanical holding brake.

Series C1400 Servo Drives have analog and digital inputs and outputs and ETHERNET connections. The user is therefore not dependent on the selection of the overlaid drive. An appropriate interface is available, with associated protocols, for many PLC or IPC solutions.

With flexibility and a compact form factor, LinMot Series C1400 Servo Drives provide a complete solution for a flexible drive concept in single and multiple axes applications, with linear motors and other actuators.

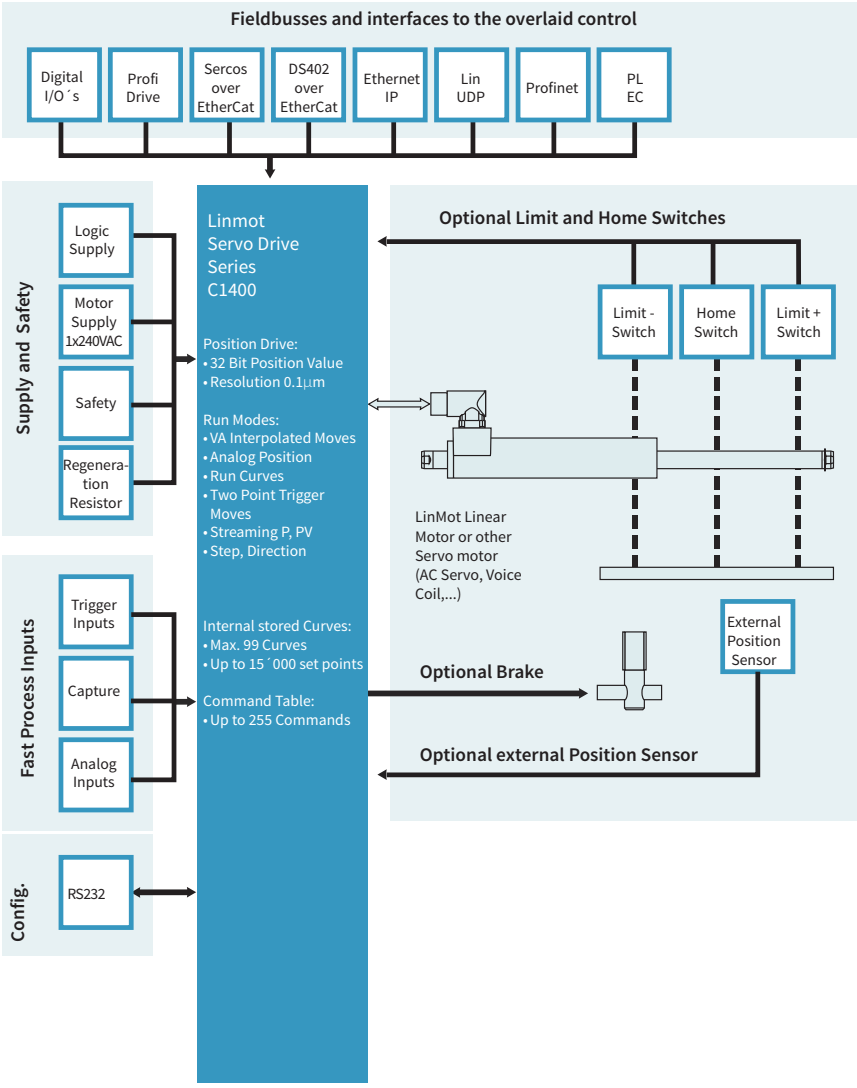

MOTOR INTERFACES

C1400 Servo Drives provide all necessary interfaces to operate linear or rotary motors with optional external peripherals, such as end position and reference switches, a mechanical brake, or a high-resolution external position sensor.

CONFIGURATION

LinMot Talk user-friendly PC software is available for configuration. In addition to online documentation, LinMot Talk provides extensive debugging tools, such as an oscilloscope and an error inspector, for simple and rapid start-up of the Axis.

Fieldbus and ETHERNET drives can also be configured directly by the overlaid control.

INTERPOLATED MOVES

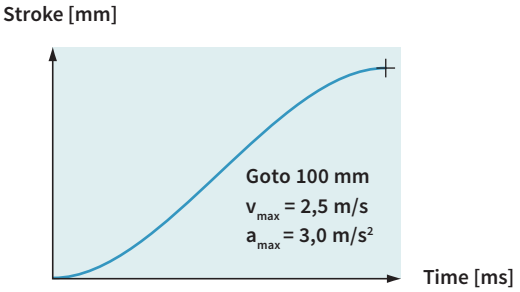

For direct position targets, using absolute or relative positioning, the desired position is reached using acceleration and velocity-limited motion profiles or jerk optimized profiles (jerk limited and Bestehorn). Positioning commands can be invoked via the serial interfaces, CANopen, DeviceNet, Profibus, Ethernet or a trigger input.

Stroke range:	±100 m
Position Resolution:	0.1 µm (32Bit)
Velocity Resolution:	1.0 µm/s (32Bit)
Acceleration Resol.:	10.0 µm/s² (32Bit)

TIME CURVES

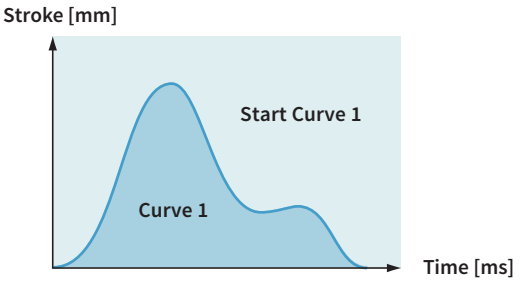

Up to 100 different time curves can be stored Series C1200 drives, with up to 16,000 individual waypoints. The motor can thus travel along time curves of any complexity, such as those generated by CAD programs and stored in the drive (Excel CSV format). The time curves can be invoked via the serial interface, fieldbusses, Ethernet, or the trigger input.

Stroke range:	±100m
Position Resolution:	0.1 µm (32Bit)
Motion profiles:	Max. 100 Time Curves
Curve points:	Max. 16'000 points

PROFILED MOVES

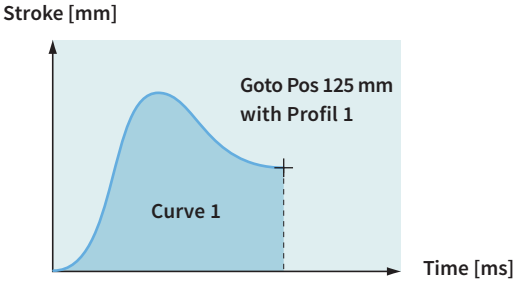

For travel to an absolute position, or shifting by a relative position, any desired motion rules can be stored besides the VA interpolator. They are stored in the drive as motion profiles (Excel CSV format). The positions can be approached, for example, with a sinusoidal motion to optimize power loss, or special reverse optimized motion profiles.

Stroke range:	±100m
Position Resolution:	0.1 µm (32Bit)
Motion profiles:	Max. 100 Time Curves
Curve points:	Max. 16'000 points

SETPOINT STREAMING

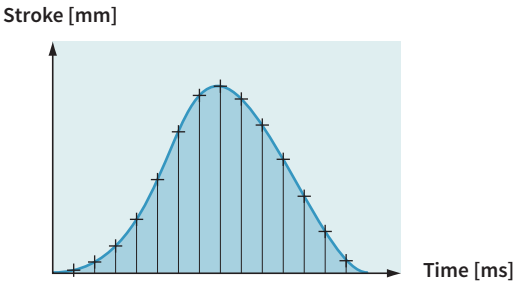

Overlaid NC drives with fieldbus or Ethernet interfaces communicate with the servo drives via "Position Streaming". The position and velocity calculated in the overlaid control is transmitted to the Servo Drive cyclically. The P, PV, or PVT mode is available for this transmission.

Position Resolution:	32 Bit
Velocity Resolution:	32 Bit
Interpolator:	8 kHz
Cycle times:	0.25 - 5 ms

EASY STEPS

Input 1	Pos 125 mm
Input 2	Pos 250 mm
Input 3	Curve 1
Input 4	Pos -30 mm

With the Easy Steps function, up to 4 positions or independent travel commands can be stored on the drive, and addressed via 4 digital inputs or fieldbus interfaces/Ethernet.

Digital inputs:	max. 4
Interface:	X4
Scanning rate:	250 µsec

COMMAND TABLE

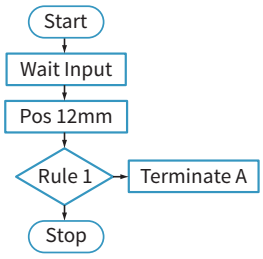

Entire motion sequences with up to 255 individual motion commands can be stored in the Command Table. This is primarily advantageous if complete motion sequences need to be executed very quickly, without dead time from the overlaid drive. In the Command Table, the programmer has access to all motion commands, internal parameters, and digital inputs and outputs.

Commands:	max. 254
Cycle time:	125 µsec

ANALOG POSITION

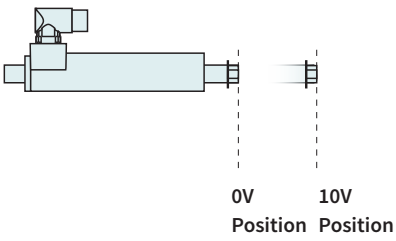

For an analog position target, the linear motor travels to a position proportional to the input voltage. The position is either scanned continuously, or only after a rising edge of the trigger signal. In order to prevent uncontrolled jumps in position, the motor travels to the positions with a programmable maximum acceleration and velocity (VA interpolator).

Inputs:	Analog Input X4
Voltage range:	0-10VDC or ±10V
Resolution:	12 Bit
Scanning rate:	>=125 µsec (adjustable)

EASY STEPS PARAMETER SCALE

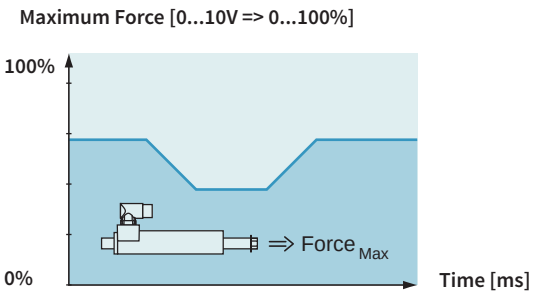

Easy Steps provide the ability to parameterize internal parameters using two analog inputs. If, for example, the maximum motor current is read at an analog input, then the maximum motor force can be provided as analog for freely programmable joining processes.

Inputs:	2 x Analog
Voltage range:	0-10VDC
Resolution:	12 Bit
Scanning rate:	250 µsec

CLOSED LOOP FORCE CONTROL

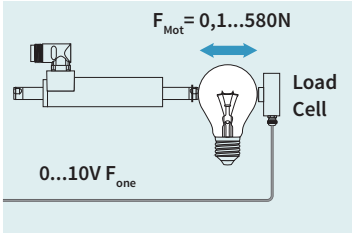

Using the force control technology function, precise joining processes can be implemented reliably and reproducibly with high-precision force control. For force control, the current motor force is measured with a load cell and controlled in the drive. Joining process or quality checks with high requirements for applied force can be implemented.

Analog input:	0-10V or ±10V
Resolution:	12 Bit
Min. Force Resolution:	0.1N

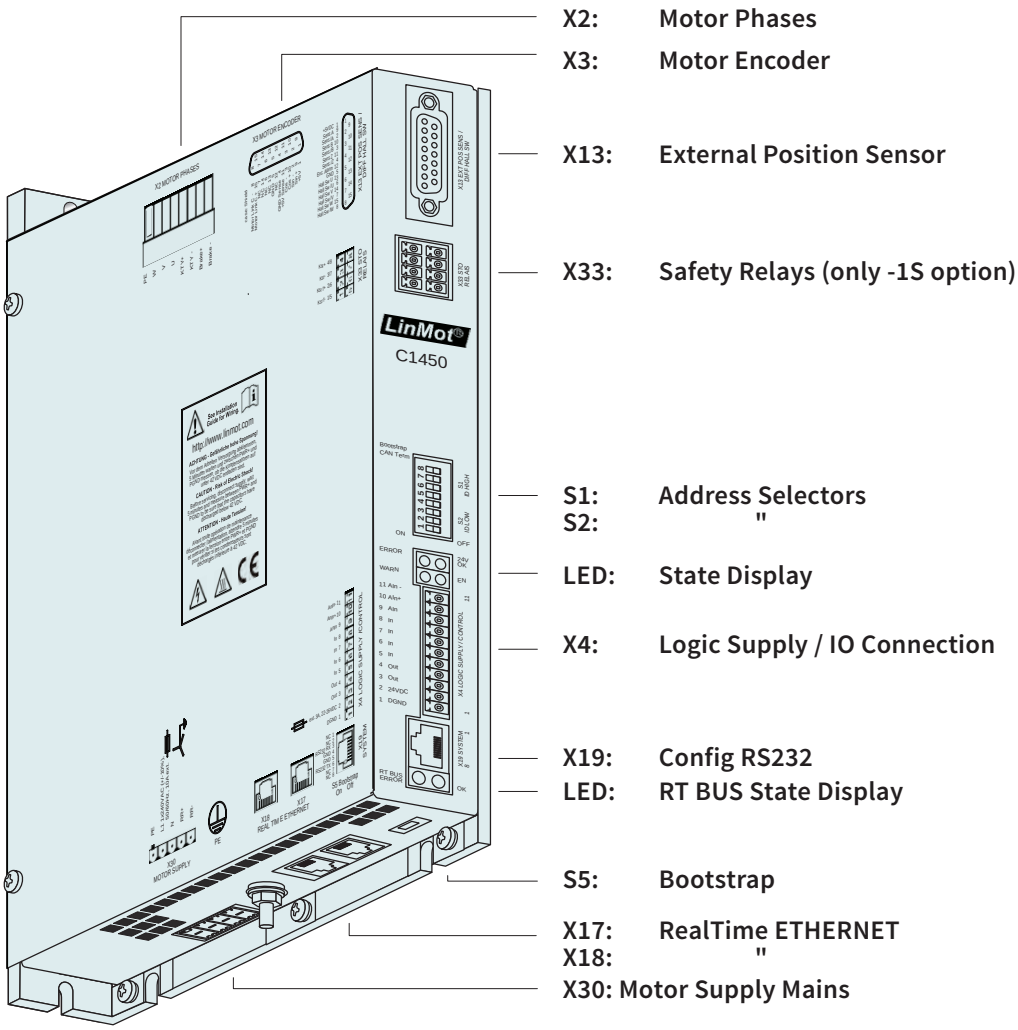

Interfaces	C1450-PN-VS-1S	C1450-PD-VS-1S	C1450-SC-VS-1S	C1450-IP-VS-1S	C1450-LU-VS-1S	C1450-EC-VS-1S	C1450-DS-VS-1S	C1450-SE-VS-1S	C1450-PL-QN-1S
PROFINET	•								
PROFINET Profidrive		•							
SERCOS III			•						
ETHERNET IP				•					
LinUDP					•				
ETHERCAT						•			
ETHERCAT CiA402							•		
ETHERCAT SoE								•	
POWERLINK									•

C1450-PN-VS -1S
C1450-PD-VS -1S
C1450-SC-VS -1S
C1450-IP-VS -1S
C1450-LU-VS -1S
C1450-EC-VS -1S
C1450-DS-VS -1S
C1450-SE-VS -1S
C1450-PL-QN -1S

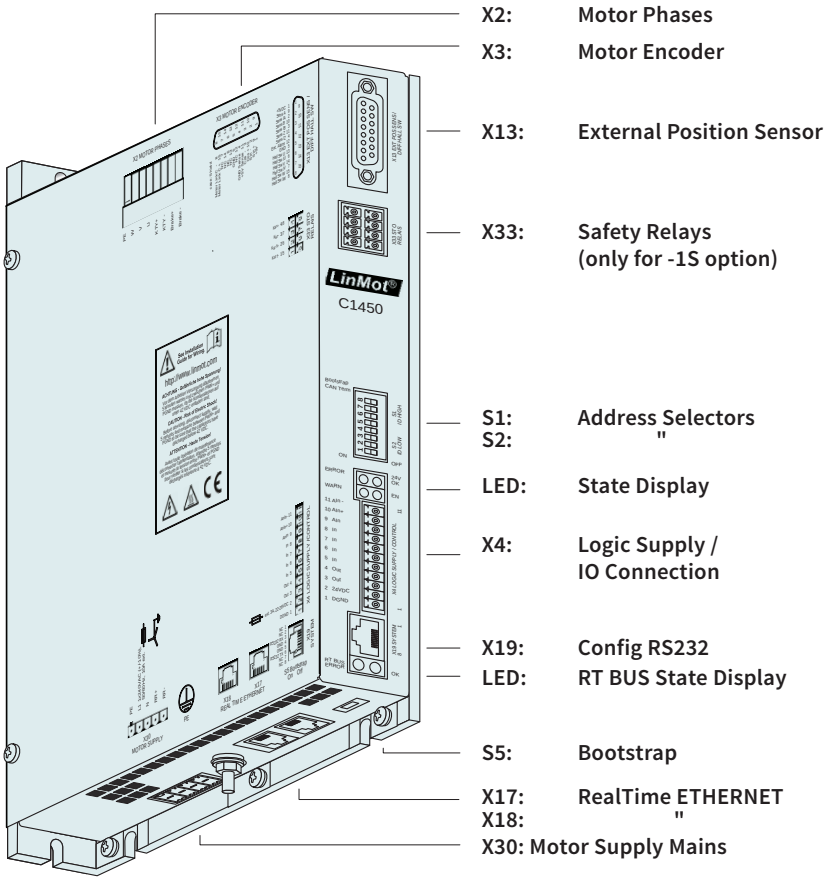

- Absolute & Relative Positioning
- Time based motion profiles
- Internally stored Motion Sequences
- Position Streaming
- Analog Position Target
- Analog Parameter Scaling
- Winding Function Block
- Force Control Technology Function
- Customer-Specific Functions

INDUSTRIAL ETHERNET

Series C1400 drives allow integration of LinMot linear motors in controls concepts with industrial Ethernet interfaces. The user can integrate Series C1400 drives regardless of the provider of the overlaid control.

LinMot drives are available with common industrial Ethernet protocols. Since all Ethernet drives have the same motion command interface, and the control and status word are identical, software blocks that have been implemented once can be transferred to other drives without a problem.

Series C1400 servo drives support the following industrial Ethernet protocols:

- Profinet
- EtherCAT
- Ethernet IP
- PowerLink
- Sercos III
- Sercos over EtherCAT

The appropriate drive is available for each protocol.

TECHNICAL DATA

Type:	Realtime ETHERNET
Switch/Hub:	Integrated 2-Port Hub/Switch
Transfer rate:	10/100MBit/sec

Minimal cycle times:

Bus cycle:	250 µs
IO update:	250 µs
Trigger Input:	125 µs
Position control loop:	125 µs
Current control loop:	125 µs

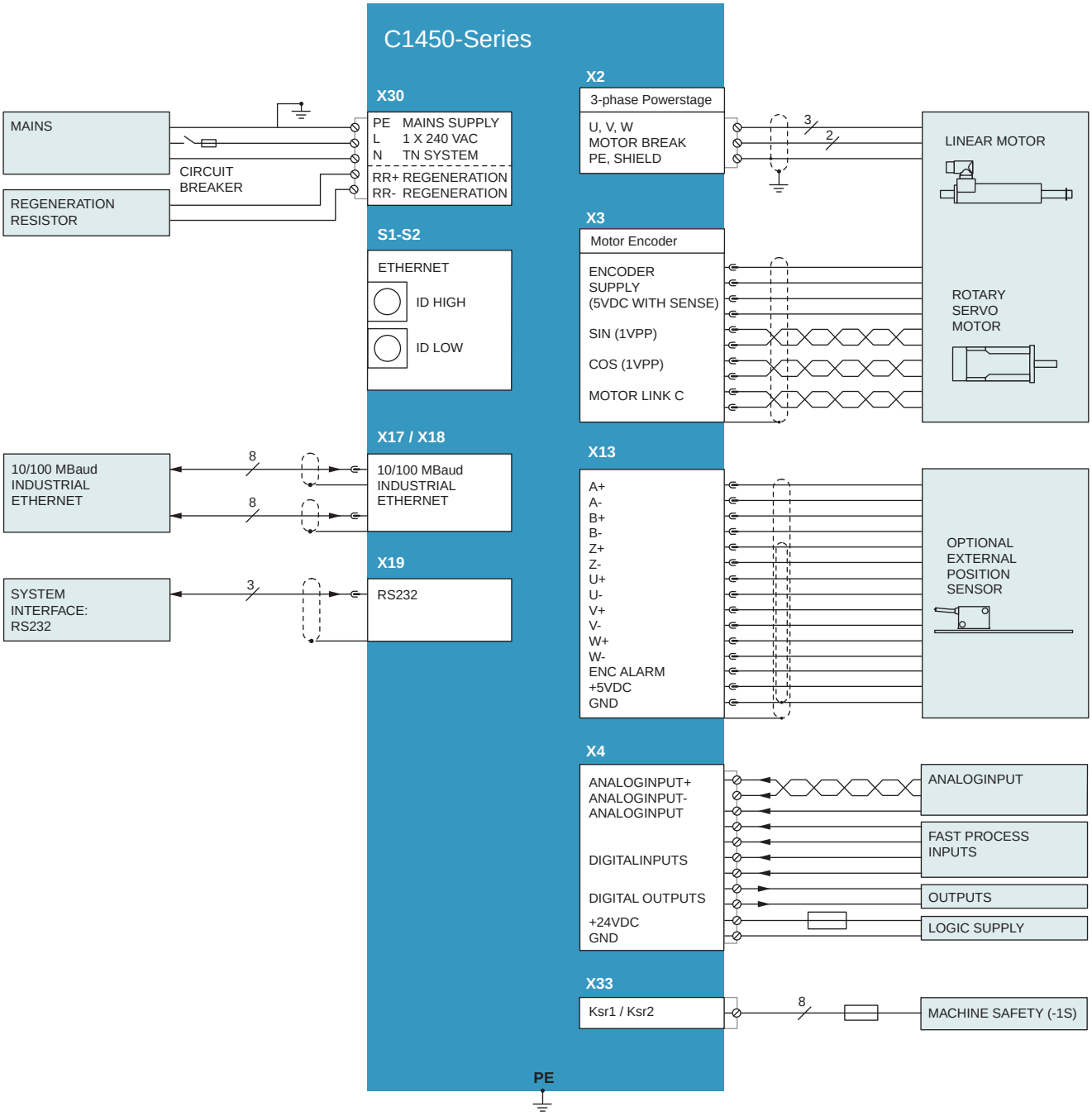
C1450-Series
X30
PE MAINS SUPPLY
L 1 X 240 VAC
N TN SYSTEM
RR+ REGENERATION
RR- REGENERATION
MAINS
CIRCUIT BREAKER
REGENERATION RESISTOR
S1-S2
ETHERNET
ID HIGH
ID LOW
X17 / X18
10/100 MBaud INDUSTRIAL ETHERNET
10/100 MBaud INDUSTRIAL ETHERNET
8
8
X19
RS232
SYSTEM INTERFACE: RS232
3
X2
3-phase Powerstage
U, V, W
MOTOR BREAK
PE, SHIELD
3
2
LINEAR MOTOR
X3
Motor Encoder
ENCODER SUPPLY (5VDC WITH SENSE)
SIN (1VPP)
COS (1VPP)
MOTOR LINK C
ROTARY SERVO MOTOR
X13
A+
A-
B+
B-
Z+
Z-
U+
U-
V+
V-
W+
W-
ENC ALARM
+5VDC
GND
OPTIONAL EXTERNAL POSITION SENSOR
X4
ANALOGINPUT+
ANALOGINPUT-
ANALOGINPUT
DIGITALINPUTS
DIGITAL OUTPUTS
+24VDC
GND
ANALOGINPUT
FAST PROCESS INPUTS
OUTPUTS
LOGIC SUPPLY
X33
Ksr1 / Ksr2
8
MACHINE SAFETY (-1S)
PE

11

X30 MOTOR SUPPLY MAINS / REGENERATION RESISTOR

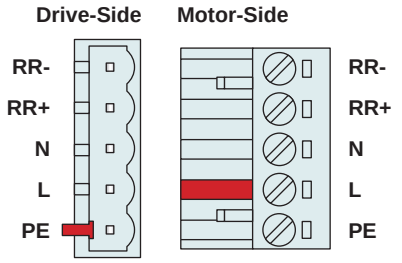

Screw connector

	Designation
RR-	Regeneration Resistor
RR+	Regeneration Resistor
N	Neutral (TN system with grounded Neutral)
L	Line 1 (1x240VAC (+-10%) 50/60Hz external fuse: max.10A)
PE	Protective Earth

Line filter is integrated into the drive.

Screw Terminals:

- Tightening torque: 0.5 - 0.6 Nm
- Screws: M3
- Use 60/75°C copper conductors only
- Conductor cross-section: 2.5 mm² (AWG 12)
- Stripping length 7 mm

LinMot Article Number:
0150-3607 (DC01-C1400/X30)

Operating of the drive is only allowed with the above article! No other type of connector shall be used!

X2 MOTOR PHASES

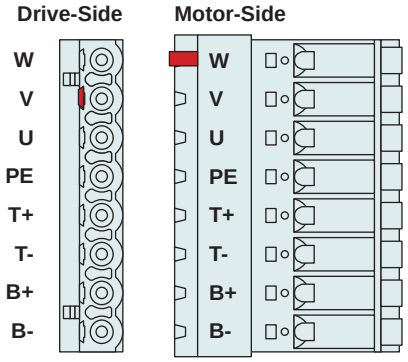

Spring cage connector

Nr	Designation
W	Motor Phase W
v	Motor Phase V
U	Motor Phase U
PE	Protective Earth
T+	Temperature Sensor KTY+
T-	Temperature Sensor KTY-
B+	Motor Brake+
B-	Motor Brake-

The Shield of the motor cable has to be mounted with a surface as large as possible (low ohm, low impedance). Use an EMC shield clamp for fixing.

Attention: An isolated thermistor is necessary! Especially LinMot D01 and D02 Motors can not be connected!

Screw Terminals:

- Spring-cage connector
- Use 60/75°C copper conductors only
- Conductor cross-section: 0.2–2.5 mm² (depends on Motor current)/AWG 24-12
- Stripping length 10 mm

LinMot Article Number:
0150-3605

Operating of the drive is only allowed with the above article! No other type of connector shall be used!

X3 MOTOR ENCODER (MOTOR LINK C) / NOT AVAILABLE ON -CO DRIVES!

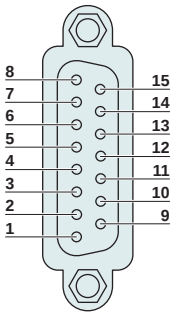

DSUB-15 (m)

Nr		Description
8		Motor Link C-
	15	Motor Link C+
7		do not connect
	14	do not connect
6		do not connect
	13	do not connect
5		GND
	12	do not connect
4		GND Sense
	11	+5V Sense
3		Cos-
	10	Cos+
2		Sin-
	9	Sin+
1		+5V-
Case		Shield

Motor Link C is a high speed serial communication protocol to the motor encoder

X4 LOGIC SUPPLY / IO CONNECTION

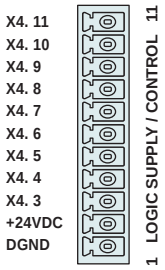

Spring cage connector

Nr	Description		
11	AnIn-	X4.11	Configurable Analog Input deifferentiell (with X4.10)
10	AnIn+	X4.10	Configurable Analog Input deifferentiell (with X4.11)
9	AnIn	X4.9	Configurable Analog Input single ended
8	In	X4.8	Configurable Input
7	In	X4.7	Configurable Input
6	In	X4.6	Configurable Input
5	In	X4.5	Configurable Input
4	Out	X4.4	Configurable Output
3	Out	X4.3	Configurable Output
2	+24VDC	Supply	Logic Supply 22-26 VDC
1	GND	Supply	Ground

LinMot Article Number:
0150-3447 (DC01-Signal/X4)

Operating of the drive is only allowed with the above article! No other type of connector shall be used!

Inputs (X4.5 .. X4.8): 24V / 5mA (Low Level: –0.5 to 5VDC, High Level: 15 to 30VDC)
Outputs (X4.3 .. X4.4): 24V / max.100mA, Peak 370mA (will shut down if exceeded)

Analog Inputs: 12 bit A/D converted
X4.9: Single ended analog input to GND, 0..10V, Input Resistance 51kΩhm to GND
X4.10/X4.11: Differential analog input, +/-10V, Common mode range +/-5VDC to GND
Input resistance 11.4kOhm for each signal to GND.

- Use 60/75°C copper conductors only
- Conductor cross-section max. 1.5 mm²
- Stripping length: 10 mm
- The 24VDC supply for the control circuit (X4.2) must be protected with an external fuse (3A slow blow)

X13 EXTERNAL POSITION SENSOR DIFFERENTIAL HALL SWITCHES

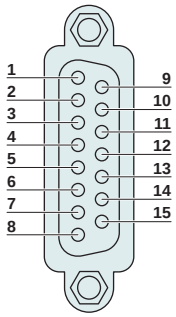

DSUB-15 (f)

Nr		SSI / BiSS / EnDat	
1		+5V DC	
	9		A+
2		A-	
	10		B+
3		B-	
	11		Z+
4		Z-	
	12		Encoder Alarm
5		GND	
	13		U+
6		U-	
	14		V+
7		V-	
	15		W+
8		W-	
Case		Shield	

Position Encoder Inputs (RS422): Max Input Frequency: 25 M counts/s with quadrature decoding, 40ns edge separation

Encoder Simulation Outputs (RS422): Max Output Frequency: 4 M counts/s with quadrature decoding, 250ns edge separation

Differential Hall Switch Inputs (RS422): Input Frequency: <1kHz
Enc. Alarm In: 5V / 1mA
Sensor Supply: 5VDC max. 100mA / 9VDC 100mA (SW selectable)

X17 - X18 REALTIME ETHERNET 10/100 MBIT/S (NOT AVAILABLE ON -CO DRIVES)

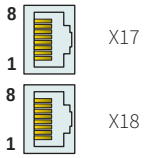

RJ-45

Nr		
X17	RT ETH In	Specification depends on RT-Bus. Please refer to interface documentation.
X18	RT ETH Out -	

X19 SYSTEM

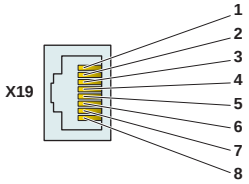

RJ-45

Nr	Description
1	Do not connect
2	Do not connect
3	RS232 Rx
4	GND
5	GND
6	RS232 Tx
7	Do not connect
8	Do not connect

Use isolated USB-RS232 converter (Art.-No. 0150-2473) for configuration over RS232.

LEDS STATE DISPLAY

240VOK	Green	24V Logic Supply OK
EN	Yellow	Motor Enabled / Error Code Low Nibble
Warn	Yellow	Warning / Error Code High Nibble
Error	Red	Error

RT BUS LEDS

BUS OK	Green	OK
BUS Error	Red	Error

The use of these LEDs depends on the type of fieldbus which is used.
Please see the corresponding manual for further information.

S1 -S2 ADDRESS SELECTORS

Switch	
S1 (5..8)	Bus ID High (0 ... F). Bit 5 is the LSB, bit 8 the MSB.
S2 (1..4)	Bus ID Low (0 ... F). Bit 1 is the LSB, bit 4 the MSB.

The use of these switches depends on the type of fieldbus which is used. Please see the corresponding manual for further information.

S5 BOOTSTRAP

The switch is used for initial programming. Make sure the switch is in position "off". Otherwise the drive will not start up.

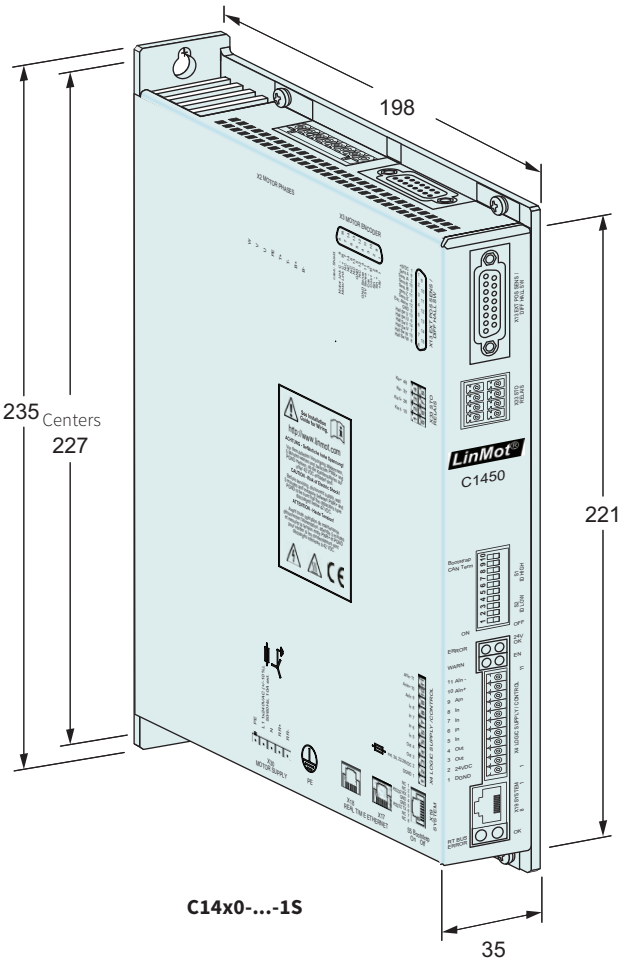

C14x0-...-1S

Dimensions in mm

Servo Drive Series		C14x0-...-1S
Width	mm (in)	43.5 (1.71)
Height	mm (in)	235 (9.25)
Depth	mm (in)	193 (7.60)
Weight	kg (lb)	
Mounting		Backside 2 x M4 Bottom Side 4 x M4
Case IP Code	IP	20
Storage temperature	°C	-25…40
Transport temperature	°C	-25…70
Operating temperature	°C	0…40
Relative humidity		95% (non-condensing)
Pollution	IEC/EN 60664-1	Pollution degree 2
Shock resistance (16 ms)	-1S option	2 g
Vibration resistance (10-200 Hz)	-1S option	1 g
Max. Case Temperature	°C	90
Max. Power Dissipation	W	100
Mounting place		In the control cabinet
Mounting position		vertical
Distance between drives	mm (in)	≥ 200 (8) top /bottom Drives with fans can be mounted vertically side by side

Servo Drives		
Item	**Description**	**Part Number**
C1450-SE-VS-1S-000	EtherCAT SoE Drive (1x240V/20A), STO	0150-2660
C1450-SC-VS-1S-000	Sercos III Drive (1x240V/20A), STO	0150-2659
C1450-PN-VS-1S-000	ProfiNet Drive (1x240V/20A), STO	0150-2658
C1450-PL-VS-1S-000	POWERLINK Drive (1x240V/20A), STO	0150-2656
C1450-PD-VS-1S-000	PROFIdrive Drive (1x240V/20A), STO	0150-2664
C1450-IP-VS-1S-000	Ethernet/IP Drive (1x240V/20A), STO	0150-2666
C1450-EC-VS-1S-000	EtherCAT Drive (1x240V/20A), STO	0150-2657
C1450-DS-VS-1S-000	EtherCAT CoE Drive (1x240V/20A), STO	0150-2665
C1400-LU-VS-1S-000	LinUDP Drive (1x240V/20A), STO	0150-2667

LinMot®

Larraioz elektronika

SERVICIO TÉCNICO, CONSULTORÍA, TRAINING Y CANAL DE VENTA OFICIAL

Instalaciones centrales

Francisco Aristeguieta Centro Tecnológico (F.A.C.T.)
GI-3162 (Zarautz – Urdaneta) km 2,2
E-20809 AIA (Gipuzkoa), Spain

www.larraioz.com

Tel. (+34) 943 140 139
Fax. (+34) 943 140 327
E-mail. info@larraioz.com

Instalaciones en Getaria

Larraioz Etxea, Eizaga Auzoa, Garate Mendi E-20808 GETARIA (Gipuzkoa), Spain

Instalaciones América Latina

Carlos Calvo 2480, B8000XAV Buenos Aires (Buenos Aires), Argentina

Dirección postal

Larraioz Electrónica Industrial, S.L. Apartado de Correos 193 E-20800 ZARAUTZ (Gipuzkoa), Spain

Mechatronics & Robotics

Industrial Automation

Industry 4.0

Vision