RCS3-RA7R Medium Thrust Rod Type (Servo Press Model with Load Cell)

Battery-less Absolute | Motor Unit Type | Side-mounted Motor | Body Width 70* mm | 230V AC Servo Motor

Model Specification Items

RCS3	RA7R	WA	100	2	□	T2	□	□
Series	Type	Encoder Type	Motor Type	Lead	Stroke	Applicable Controllers	Cable Length	Options
		WA: Battery-less Absolute	100: Servo motor 100W	2: Lead 2mm	120: 120mm ~ 520: 520mm (Every 50mm)	T2: SCON-CB/CGB (For servo press only)	N : None P : 1m S : 3m M : 5m X□□ : Specified length R□□ : Robot cable	Refer to Options table below. * Specify cable exit direction (CJT/CJB/CJO). For side-mounted motor type, specify the mount direction (ML/MR).

* Does not include a controller.
* Please contact IAI for more information about the model specification items.
* Body width does not include the width of the side-mounted motor.

CE RoHS

Horizontal | Vertical | Side | Ceiling

* Depending on the model, there may be some limitations to using the vertical mount position. Please contact IAI for more information.

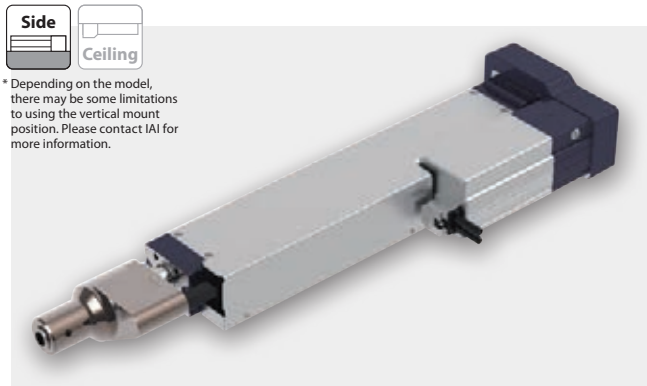

Correlation Diagram of Push Force and Current Limit Value

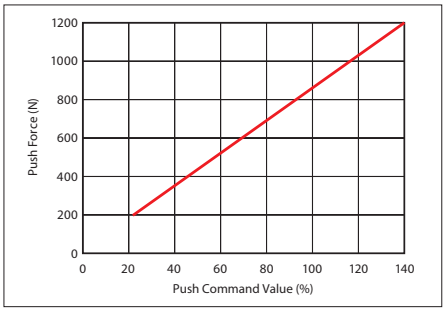

Caution:

- The correlation between push force and push command value are strictly for reference purposes. Actual numbers may vary slightly.
- The push command value should be 24% or more because the push force will be unstable when the push command value is low.

POINT Selection Notes

(1) For push-motion operation, check the allowable time period of continuous push-motion set with a different thrust force. Also, please check that the allowable continuous operational thrust force for the actual push cycle is less than the allowable continuous operational thrust force. (Even if there is no push motion) Please refer to P.27 for more information.

(2) Customer's tooling is to be mounted on the load cell itself. In case any radial or moment load is applied to the load cell, please consider adding the external guides, etc. to offset those side loads.

(3) Please install a support block when front mounting or back mounting a horizontally mounted actuator that is 150st or more. (Refer to page 34 "Notes When Installing")

(4) Servo Press with load cell should not be used for pulling motion. It will damage the load cell.

Actuator Specifications

Lead and Payload

Model Number	Motor wattage (W)	Lead (mm)	Max. speed (mm/s)	Max. acceleration (G)	Max. payload Horizontal (kg)	Max. payload Vertical (kg)	Rated thrust (N)	Max. push force (N)
RCS3-RA7R-WA-100-2-①-T2-②-③	100	2	100	0.3	10	10	849	1200

Legend: ① Stroke ② Cable Length ③ Option

* Max. horizontal payload means max. weight on the customer's external guide.
** Max. push force can be achieved only within 1~10mm/s speed range.

Stroke and Max Speed

Lead (mm) \ Stroke (mm)	120~520
2	100

(Unit: mm/s)

Cable Length

Type	Cable Code
Standard	**P**(1m)
	S(3m)
	M(5m)
Specified length (Standard cable)	**X06**(6m) ~**X10**(10m)
	X11(11m)~**X15**(15m)
	X16(16m)~**X20**(20m)
Robot cable	**R01**(1m) ~**R03**(3m)
	R04(4m) ~**R05**(5m)
	R06(6m) ~**R10**(10m)
	R11(11m)~**R15**(15m)
	R16(16m)~**R20**(20m)

* Please contact IAI for maintenance cables.

Actuator Specifications

Item	Description
Drive system	Ball screw ø12mm rolled C10
Positioning repeatability	±0.01mm
Lost motion	0.1mm or less
Load cell rated capacity	2000N
Loading repeatability (*1)	±0.5% F.S (*2)
Ambient operating temp. & humidity	0°C~40°C, 85% RH or less (non-condensing)

(*1) Ratio (in percentage) of the load variations caused by the repeated operations to the load cell rated capacity
(*2) F.S.: Full Scale, the maximum measurable value.

Options

Name	Option Code	Reference Page
Brake	**B**	See P.35
Cable exit direction (Top)	**CJT**	See P.35
Cable exit direction (Bottom)	**CJB**	See P.35
Cable exit direction (Outside)	**CJO**	See P.35
Flange (Front)	**FL**	See P.35
Foot bracket (*1)	**FT**	See P.36
Equipped with load cell (Standard equipment) (*2)	**LCT**	See P.37
Motor side-mounted (left)	**ML**	See P.37
Motor side-mounted (right)	**MR**	See P.37

(*1) Refer to P. 37 for the number of brackets included.
(*2) Please make sure to enter "LCT" in the box of Model Specification Items to select the actuator with load cell option.

Dimensions

CAD drawings can be downloaded from our website.
www.robocylinder.de

*1 Connect the motor-encoder cables. Please contact IAI for more details on the cable.
*2 While the rod is returning to its home position, please be careful of interference from surrounding objects, as it will travel until it reaches the mechanical end.
M.E: Mechanical end
S.E: Stroke end

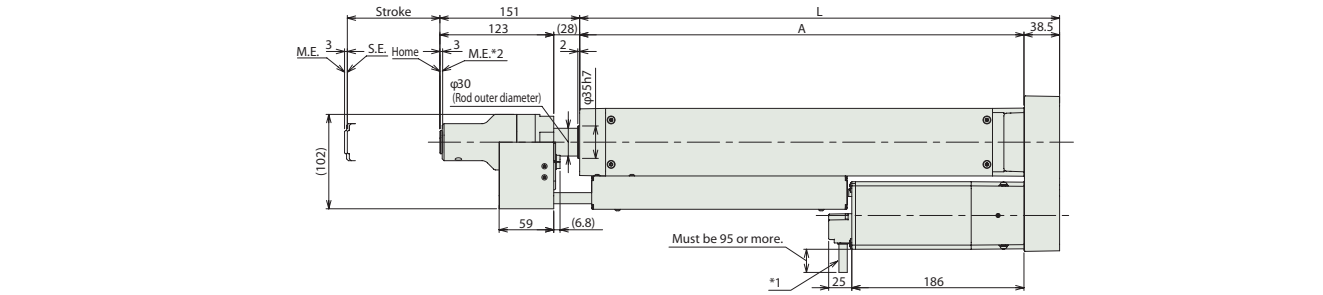

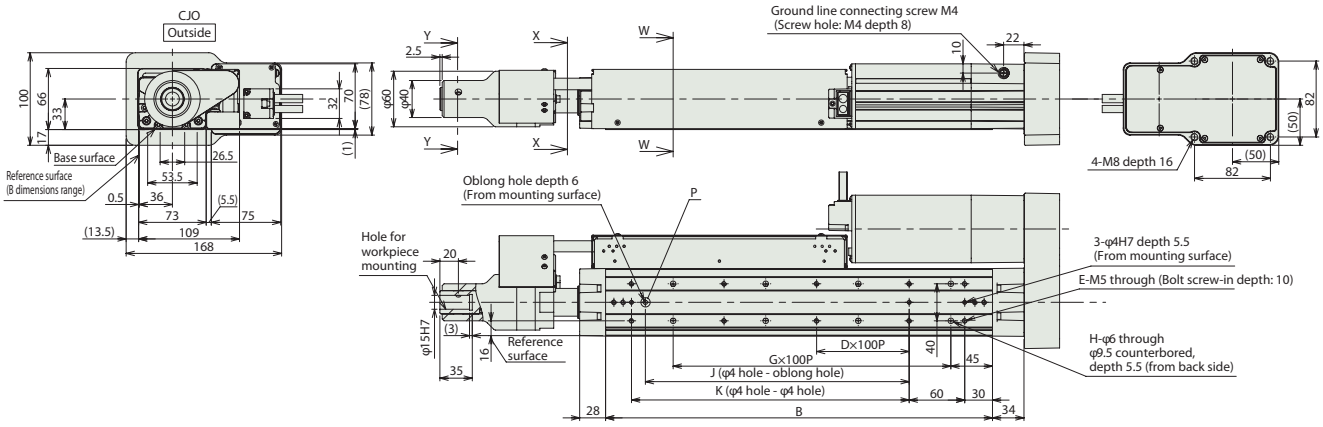

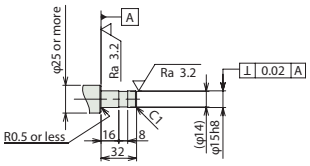

Workpiece reference dimensions

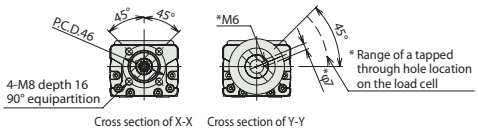

Cross section of X-X Cross section of Y-Y

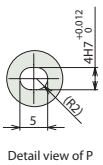

Detail view of P

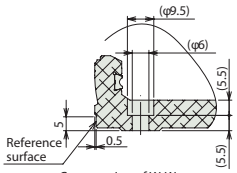

Cross section of W-W

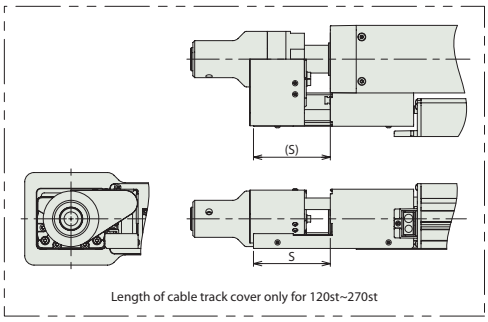

Length of cable track cover only for 120st~270st

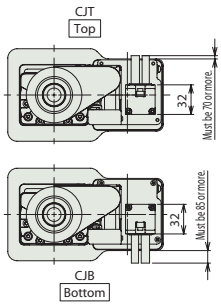

Cable exit direction (Option)

Dimensions and Mass by Stroke

Stroke		120	170	220	270	320	370	420	470	520
L		318.5	368.5	418.5	468.5	518.5	568.5	618.5	668.5	718.5
A		280	330	380	430	480	530	580	630	680
B		218	268	318	368	418	468	518	568	618
D		1	1	2	2	3	3	4	4	5
E		6	6	8	8	10	10	12	12	14
G		1	2	2	3	3	4	4	5	5
H		4	6	6	8	8	10	10	12	12
J		85	85	185	185	285	285	385	385	485
K		100	100	200	200	300	300	400	400	500
S		83	60	39	17	–	–	–	–	–
Mass (kg)	Without brake	6.1	6.5	6.8	7.2	7.5	7.9	8.2	8.6	8.9
	With brake	6.3	6.7	7.0	7.4	7.7	8.1	8.4	8.8	9.1

Applicable Controllers

The RCS3 series actuators can be operated by the controllers indicated below. Please select the type depending on your intended use.

Name	External view	Max. number of connectable axes	Power supply voltage	Control method					Maximum number of positioning points	Reference page
				Positioner	Pulse train	Program	Press program	Network * Option		
SCON-CB/CGB (For servo press only)		1	Single-phase 115VAC /230VAC	–	–	–	●	DeviceNet, CC-Link, PROFIBUS, CompoNet, EtherCAT, EtherNet/IP, POWERLINK	–	Refer to the SCON-CB/CGB-F servo press function manual.