RCS4-WSA14R

±10μm Standard | Simple Dust-proof | Battery-less Absolute | Motor Unit Coupled | Side-mounted Motor | Body Width 140* mm | 230V AC Servo Motor

■ Model Specification Items

RCS4 — WSA14R — WA — 200 — ☐ — ☐ — T2 — ☐ — ☐

Series	Type	Encoder Type	Motor Type	Lead	Stroke	Applicable Controllers	Cable Length	Options
RCS4	WSA14R	WA: Battery-less Absolute	200: Servo motor 200W	36:36mm 24:24mm 16:16mm 8: 8mm 4: 4mm	50:50mm ~ 800:800mm (50mm increments)	T2:SCON MSCON SSEL XSEL-P/Q XSEL-RA/SA	N : None P : 1m S : 3m M: 5m X□□ : Specified Length R□□ : Robot Cable	Refer to Options table below.

* Body width does not include the width of the side-mounted motor.

CE RoHS

Horizontal | Vertical | Side | Ceiling

* Depending on the model, there may be some limitations to using the vertical, side, and ceiling mount positions. Please refer to the Selection Notes on P.138 for more information.

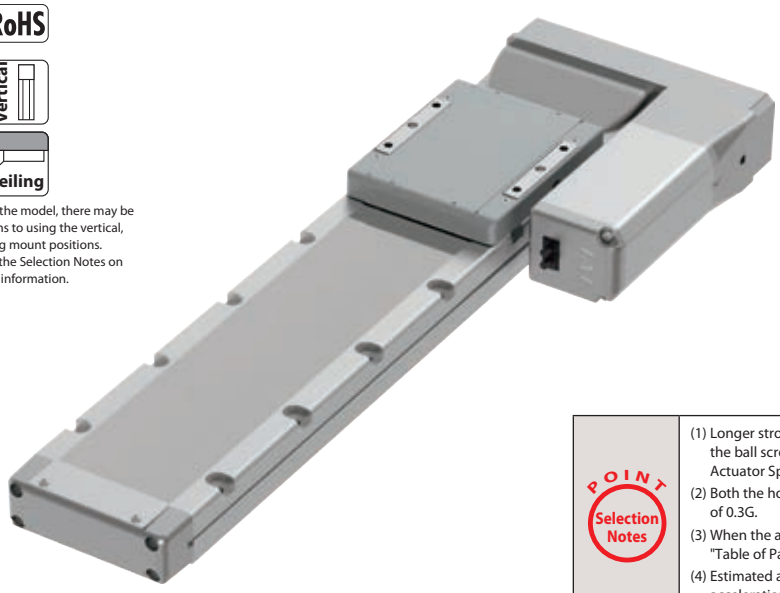

POINT Selection Notes

(1) Longer strokes may cause the maximum speed to decrease due to resonance of the ball screw. Be sure to check the maximum speed of the desired stroke in the Actuator Specifications table, which can be found below.
(2) Both the horizontal and vertical payloads assume operation at an acceleration of 0.3G.
(3) When the acceleration is increased, the payload will be reduced. Please refer to "Table of Payload by Acceleration" on P.139 for more details.
(4) Estimated allowable duty varies depending on operating conditions (payload, acceleration/deceleration, etc.). Please refer to P. 149 for more information.

Actuator Specifications

■ Lead and Payload

Model Number	Motor wattage (W)	Lead (mm)	Max. payload Horizontal (kg)	Max. payload Vertical (kg)	Rated thrust (N)	Stroke (mm)
RCS4-WSA14R-WA-200-36-①-T2-②-③	200	36	7	–	95	50~800 (50mm increments)
RCS4-WSA14R-WA-200-24-①-T2-②-③		24	20	2.5	142	
RCS4-WSA14R-WA-200-16-①-T2-②-③		16	45	8	214	
RCS4-WSA14R-WA-200-8-①-T2-②-③		8	65	10	427	
RCS4-WSA14R-WA-200-4-①-T2-②-③		4	75	25	855	

Legend: ① Stroke ② Cable Length ③ Option

■ Stroke and Max Speed

(Unit: mm/s)

Lead \ Stroke	50~450 (50mm increments)	500 (mm)	550 (mm)	600 (mm)	650 (mm)	700 (mm)	750 (mm)	800 (mm)
36	1710			1590	1400	1240	1110	990
24	1440	1420	1220	1060	930	830	740	665
16	960	920	790	690	610	550	490	440
8	480	460	400	350	305	270	240	215
4	240	230	200	170	150	135	120	105

Cable Length

Type	Cable Code
Standard	**P** (1m)
	S (3m)
	M (5m)
Specified length (Standard cable)	**X06** (6m) ~ **X10** (10m)
	X11 (11m) ~ **X15** (15m)
	X16 (16m) ~ **X20** (20m)
Robot cable	**R01** (1m) ~ **R03** (3m)
	R04 (4m) ~ **R05** (5m)
	R06 (6m) ~ **R10** (10m)
	R11 (11m) ~ **R15** (15m)
	R16 (16m) ~ **R20** (20m)

Actuator Specifications

Item	Description
Drive system	Ball screw ø12mm, rolled C10
Positioning repeatability	±0.01mm
Lost motion	0.1mm or less
Base	Material: Aluminum with white alumite treatment
Allowable static moment	Ma direction 462N·m, Mb direction 462N·m, Mc direction 1170N·m
Allowable dynamic moment (*1)	Ma direction 122N·m, Mb direction 122N·m, Mc direction 308N·m
Ambient operating temp. & humidity	0~40°C, 85% RH or less (Non-condensing)

(*1) Assumes a standard rated life of 5000km. The service life will vary depending on operation and installation conditions. Please contact IAI for details of the running life.

• Reference for overhang load length: Ma: 550mm or less, Mb, Mc: 550mm or less

Allowable load moment directions | Overhang load lengths

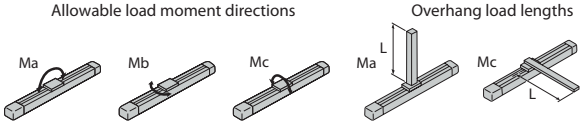

If the load moments in Ma/Mb/Mc direction are within the allowable ranges, there is no overhang load length limit.

Options

Name	Option Code	Reference Page
Brake	**B**	See P.131
Cable exit direction (Top)	**CJT**	See P.131
Cable exit direction (Bottom)	**CJB**	See P.131
Cable exit direction (Outside)	**CJO**	See P.131
Motor side-mounted to left (standard)	**ML**	See P.135
Motor side-mounted to right	**MR**	See P.135
Non-motor end specification	**NM**	See P.136
Slider roller specification	**SR**	See P.137
Slider spacer	**SS**	See P.137
Round cable joint connector with screw locking (*1)	**EU**	See P.131

(*1) EU option will be available soon.

Dimensions

CAD drawings can be downloaded from our website.
www.robocylinder.de

*1 When the slider is returning to its home position, please be careful of interference from surrounding objects, as it will travel until it reaches the M.E.
M.E: Mechanical end S.E: Stroke end

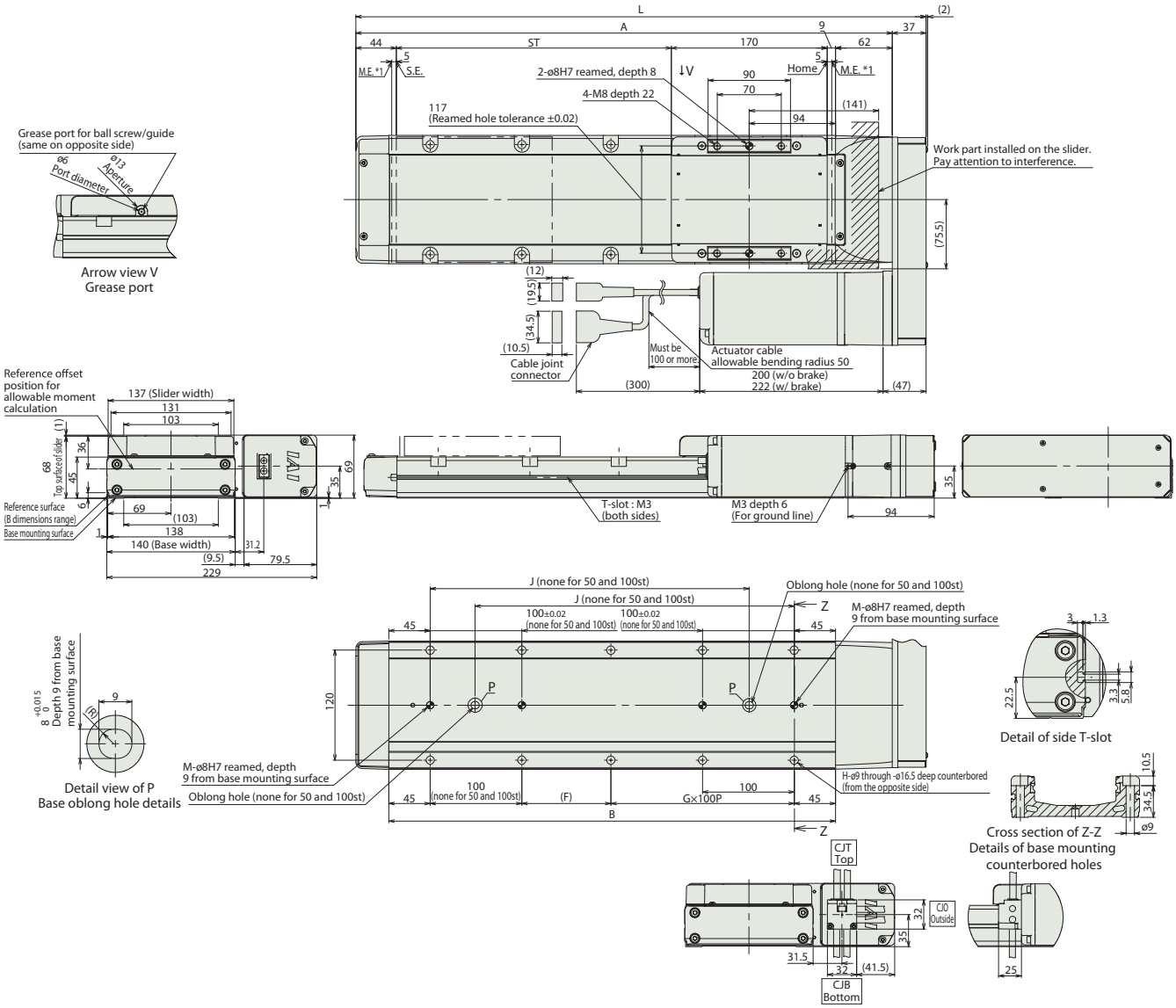

Dimensions and Mass by Stroke

Stroke		50	100	150	200	250	300	350	400	450	500	550	600	650	700	750	800
L		372	422	472	522	572	622	672	722	772	822	872	922	972	1022	1072	1122
A		335	385	435	485	535	585	635	685	735	785	835	885	935	985	1035	1085
B		237	287	337	387	437	487	537	587	637	687	737	787	837	887	937	987
F		147	197	47	97	47	97	47	97	47	97	47	97	47	97	47	97
G		0	0	1	1	2	2	3	3	4	4	5	5	6	6	7	7
H		4	4	8	8	10	10	12	12	14	14	16	16	18	18	20	20
J		–	–	198	248	298	348	398	448	498	548	598	648	698	748	798	848
M		1	1	2	2	2	2	2	2	2	2	2	2	2	2	2	2
Mass (kg)	W/o brake	7.4	7.9	8.4	8.9	9.4	9.9	10.3	10.8	11.3	11.8	12.3	12.8	13.3	13.8	14.2	14.7
	W/ brake	8.0	8.5	9.0	9.5	10.0	10.5	10.9	11.4	11.9	12.4	12.9	13.4	13.9	14.4	14.8	15.3

Applicable Controllers

The RCS4 series actuators can be operated by the controllers indicated below. Please select the type depending on your intended use.

Name	External view	Max. number of connectable axes	Input power	Control method: Positioner	Pulse train	Program	Network * Option	Maximum number of positioning points	Reference page
SCON-CB/CGB		1	Single phase 115V/230VAC	●	●	–	DeviceNet, CC-Link, PROFIBUS, CompoNet, EtherCAT, EtherNet/IP	512 (768 for network spec.)	Please see P.151
SCON-LC/LCG (*)		1		–	–	●		512 (768 for network spec.)	Please see the dedicated controller catalog or manual.
SCON-CAL/CGAL		1		●	–	–		512 (768 for network spec.)	
MSCON-C		6		This model is network-compatible only.				256	
SSEL-CS		2		●	–	●		20000	
XSEL-P/Q or XSEL-RA/SA (*)		6 or 8 (Depending on the type)	Single phase 230VAC Three-phase 230VAC	–	–	●		20000 or 55000 (Depending on the type)	

Note: The type of compatible networks will vary depending on the controller. Please refer to the reference page for more information.

(*) Coming soon