# RCS4-WSA12R

±10μm Standard | Simple Dust-proof | Battery-less Absolute | Motor Unit Coupled | Side-mounted Motor | Body Width 120* mm | 230V AC Servo Motor

■ Model Specification Items

RCS4 — WSA12R — WA — 100 — ☐ — ☐ — T2 — ☐ — ☐

| Series | Type | Encoder Type | Motor Type | Lead | Stroke | Applicable Controllers | Cable Length | Options |
|---|---|---|---|---|---|---|---|---|
| | | WA: Battery-less Absolute | 100: Servo motor 100W | 30:30mm<br>20:20mm<br>12:12mm<br>6: 6mm<br>3: 3mm | 50:50mm<br>~<br>800:800mm<br>(50mm increments) | T2:SCON<br>MSCON<br>SSEL<br>XSEL-P/Q<br>XSEL-RA/SA | N : None<br>P : 1m<br>S : 3m<br>M: 5m<br>X□□ : Specified Length<br>R□□ : Robot Cable | Refer to Options table below. |

* Body width does not include the width of the side-mounted motor.

CE RoHS

Horizontal | Vertical | Side | Ceiling

* Depending on the model, there may be some limitations to using the vertical, side, and ceiling mount positions. Please refer to the Selection Notes on P.138 for more information.

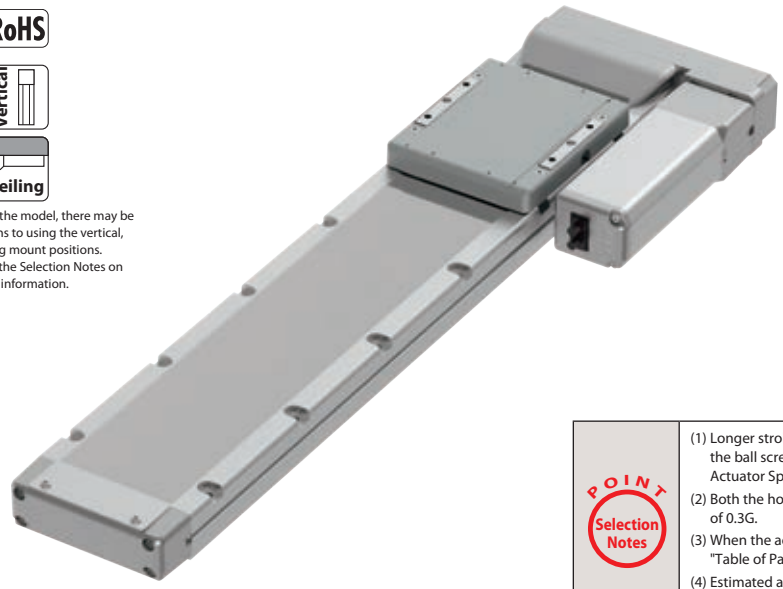

POINT Selection Notes

(1) Longer strokes may cause the maximum speed to decrease due to resonance of the ball screw. Be sure to check the maximum speed of the desired stroke in the Actuator Specifications table, which can be found below.
(2) Both the horizontal and vertical payloads assume operation at an acceleration of 0.3G.
(3) When the acceleration is increased, the payload will be reduced. Please refer to "Table of Payload by Acceleration" on P.139 for more details.
(4) Estimated allowable duty varies depending on operating conditions (payload, acceleration/deceleration, etc.). Please refer to P. 149 for more information.

## Actuator Specifications

### ■ Lead and Payload

| Model Number | Motor wattage (W) | Lead (mm) | Max. payload Horizontal (kg) | Max. payload Vertical (kg) | Rated thrust (N) | Stroke (mm) |
|---|---|---|---|---|---|---|
| RCS4-WSA12R-WA-100-30-①-T2-②-③ | 100 | 30 | 5 | – | 57 | 50~800 (50mm increments) |
| RCS4-WSA12R-WA-100-20-①-T2-②-③ | | 20 | 13 | 3 | 85 | |
| RCS4-WSA12R-WA-100-12-①-T2-②-③ | | 12 | 23 | 8 | 142 | |
| RCS4-WSA12R-WA-100-6-①-T2-②-③ | | 6 | 43 | 15 | 283 | |
| RCS4-WSA12R-WA-100-3-①-T2-②-③ | | 3 | 55 | 15 | 566 | |

Legend: ① Stroke ② Cable Length ③ Option

### ■ Stroke and Max Speed

(Unit: mm/s)

| Lead \ Stroke | 50~450 (50mm increments) | 500 (mm) | 550 (mm) | 600 (mm) | 650 (mm) | 700 (mm) | 750 (mm) | 800 (mm) |
|---|---|---|---|---|---|---|---|---|
| 30 | 1600 | | 1450 | 1260 | 1100 | 970 | 860 | 770 |
| 20 | 1200 | 1130 | 970 | 840 | 740 | 650 | 580 | 520 |
| 12 | 720 | 610 | 535 | 465 | 405 | 355 | 315 | 285 |
| 6 | 360 | 310 | 265 | 230 | 200 | 175 | 155 | 140 |
| 3 | 180 | 150 | 130 | 115 | 100 | 85 | 75 | 70 |

## Cable Length

| Type | Cable Code |
|---|---|
| Standard | **P** (1m) |
| | **S** (3m) |
| | **M** (5m) |
| Specified length (Standard cable) | **X06** (6m) ~ **X10** (10m) |
| | **X11** (11m) ~ **X15** (15m) |
| | **X16** (16m) ~ **X20** (20m) |
| Robot cable | **R01** (1m) ~ **R03** (3m) |
| | **R04** (4m) ~ **R05** (5m) |
| | **R06** (6m) ~ **R10** (10m) |
| | **R11** (11m) ~ **R15** (15m) |
| | **R16** (16m) ~ **R20** (20m) |

## Actuator Specifications

| Item | Description |
|---|---|
| Drive system | Ball screw ø10mm, rolled C10 |
| Positioning repeatability | ±0.01mm |
| Lost motion | 0.1mm or less |
| Base | Material: Aluminum with white alumite treatment |
| Allowable static moment | Ma direction 311N·m, Mb direction 311N·m, Mc direction 827N·m |
| Allowable dynamic moment (*1) | Ma direction 87.5N·m, Mb direction 87.5N·m, Mc direction 233N·m |
| Ambient operating temp. & humidity | 0~40°C, 85% RH or less (Non-condensing) |

(*1) Assumes a standard rated life of 5000km. The service life will vary depending on operation and installation conditions. Please contact IAI for details of the running life.

• Reference for overhang load length: Ma: 450mm or less, Mb, Mc: 450mm or less

Allowable load moment directions | Overhang load lengths

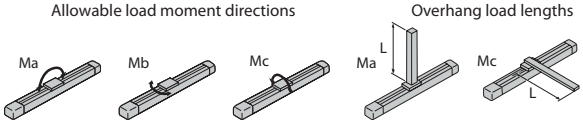


If the load moments in Ma/Mb/Mc direction are within the allowable ranges, there is no overhang load length limit.

## Options

| Name | Option Code | Reference Page |
|---|---|---|
| Brake | **B** | See P.131 |
| Cable exit direction (Top) | **CJT** | See P.131 |
| Cable exit direction (Bottom) | **CJB** | See P.131 |
| Cable exit direction (Outside) | **CJO** | See P.131 |
| Motor side-mounted to left (standard) | **ML** | See P.135 |
| Motor side-mounted to right | **MR** | See P.135 |
| Non-motor end specification | **NM** | See P.136 |
| Slider roller specification | **SR** | See P.137 |
| Round cable joint connector with screw locking (*1) | **EU** | See P.131 |

(*1) EU option will be available soon.

## Dimensions

CAD drawings can be downloaded from our website.
www.robocylinder.de

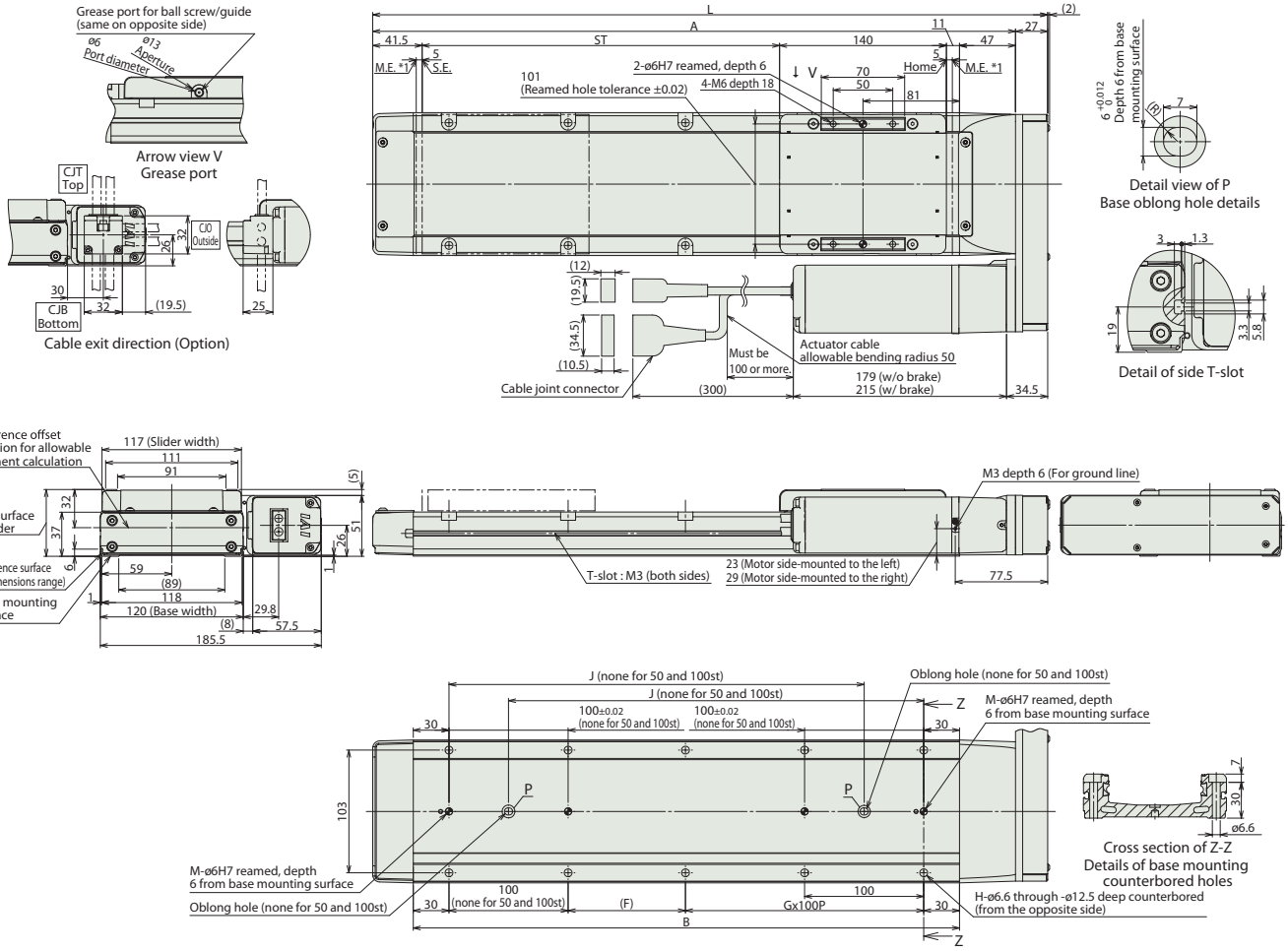


### Dimensions and Mass by Stroke

| Stroke | | 50 | 100 | 150 | 200 | 250 | 300 | 350 | 400 | 450 | 500 | 550 | 600 | 650 | 700 | 750 | 800 |
|---|---|---|---|---|---|---|---|---|---|---|---|---|---|---|---|---|---|
| L | | 316.5 | 366.5 | 416.5 | 466.5 | 516.5 | 566.5 | 616.5 | 666.5 | 716.5 | 766.5 | 816.5 | 866.5 | 916.5 | 966.5 | 1016.5 | 1066.5 |
| A | | 289.5 | 339.5 | 389.5 | 439.5 | 489.5 | 539.5 | 589.5 | 639.5 | 689.5 | 739.5 | 789.5 | 839.5 | 889.5 | 939.5 | 989.5 | 1039.5 |
| B | | 208.5 | 258.5 | 308.5 | 358.5 | 408.5 | 458.5 | 508.5 | 558.5 | 608.5 | 658.5 | 708.5 | 758.5 | 808.5 | 858.5 | 908.5 | 958.5 |
| F | | 148.5 | 198.5 | 48.5 | 98.5 | 48.5 | 98.5 | 48.5 | 98.5 | 48.5 | 98.5 | 48.5 | 98.5 | 48.5 | 98.5 | 48.5 | 98.5 |
| G | | 0 | 0 | 1 | 1 | 2 | 2 | 3 | 3 | 4 | 4 | 5 | 5 | 6 | 6 | 7 | 7 |
| H | | 4 | 4 | 8 | 8 | 10 | 10 | 12 | 12 | 14 | 14 | 16 | 16 | 18 | 18 | 20 | 20 |
| J | | – | – | 198.5 | 248.5 | 298.5 | 348.5 | 398.5 | 448.5 | 498.5 | 548.5 | 598.5 | 648.5 | 698.5 | 748.5 | 798.5 | 848.5 |
| M | | 1 | 1 | 2 | 2 | 2 | 2 | 2 | 2 | 2 | 2 | 2 | 2 | 2 | 2 | 2 | 2 |
| Mass (kg) | W/o brake | 4.2 | 4.5 | 4.9 | 5.2 | 5.6 | 5.9 | 6.2 | 6.6 | 6.9 | 7.2 | 7.6 | 7.9 | 8.3 | 8.6 | 8.9 | 9.3 |
| | W/ brake | 4.5 | 4.8 | 5.2 | 5.5 | 5.9 | 6.2 | 6.5 | 6.9 | 7.2 | 7.5 | 7.9 | 8.2 | 8.6 | 8.9 | 9.2 | 9.6 |

## Applicable Controllers

The RCS4 series actuators can be operated by the controllers indicated below. Please select the type depending on your intended use.

| Name | External view | Max. number of connectable axes | Input power | Control method: Positioner | Pulse train | Program | Network * Option | Maximum number of positioning points | Reference page |
|---|---|---|---|---|---|---|---|---|---|
| SCON-CB/CGB | | 1 | Single phase 115V/230VAC | ● | ● | – | DeviceNet, CC-Link, PROFIBUS, CompoNet, EtherCAT, EtherNet/IP, PROFINET | 512 (768 for network spec.) | Please see P.151 |
| SCON-LC/LCG (*) | | 1 | | – | – | ● | | 512 (768 for network spec.) | Please see the dedicated controller catalog or manual. |
| SCON-CAL/CGAL | | 1 | | ● | – | – | | 512 (768 for network spec.) | |
| MSCON-C | | 6 | | This model is network-compatible only. | | | | 256 | |
| SSEL-CS | | 2 | | ● | – | ● | | 20000 | |
| XSEL-P/Q or XSEL-RA/SA (*) | | 6 or 8 (Depending on the type) | Single phase 230VAC Three-phase 230VAC | – | – | ● | | 20000 or 55000 (Depending on the type) | |

Note: The type of compatible networks will vary depending on the controller. Please refer to the reference page for more information.

(*) Coming soon