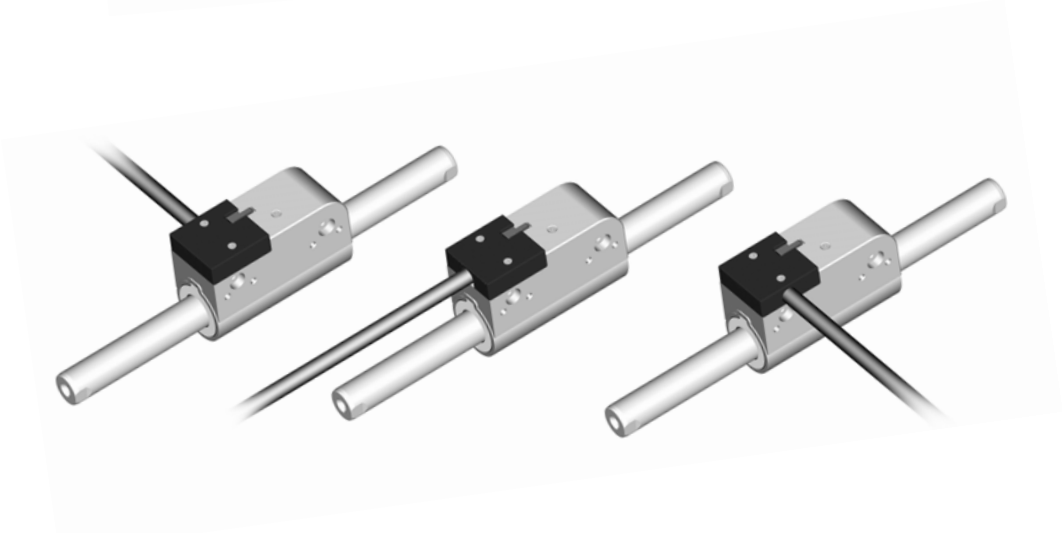

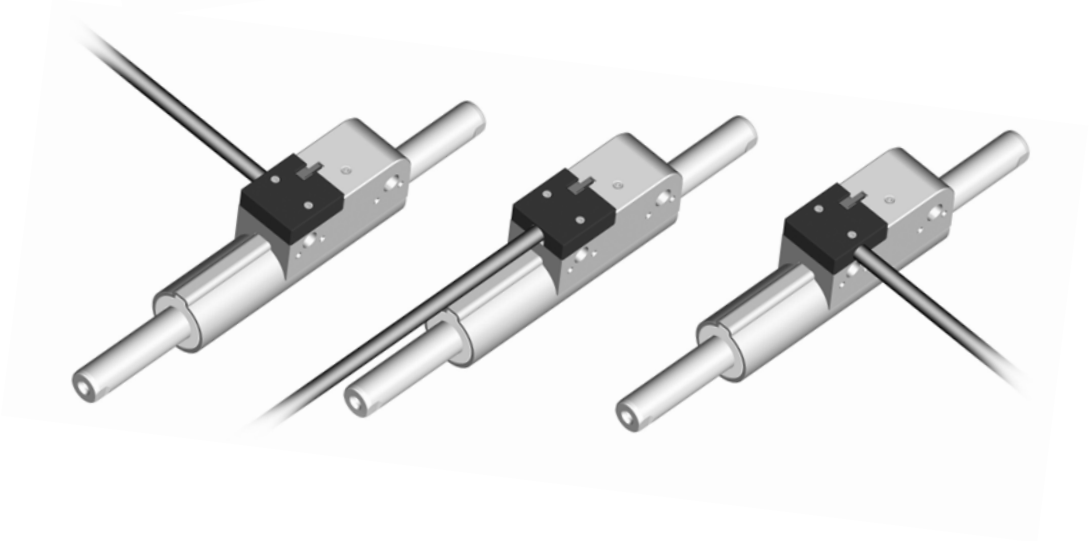

P02-23Sx80/10x50	200
P02-23Sx80/30x90	202
P02-23Sx80/50x110	204
P02-23Sx80/80x140	206
P02-23Sx80/150x210	208
P02-23Sx80/210x270	210
P02-23Sx80/280x340	212
P02-23Sx80/340x400	214
P02-23Sx80/440x500	216
P02-23Sx80/620x680	218
P02-23Sx80/710x770	220

Max. Stroke: 50mm
Peak Force: 39N

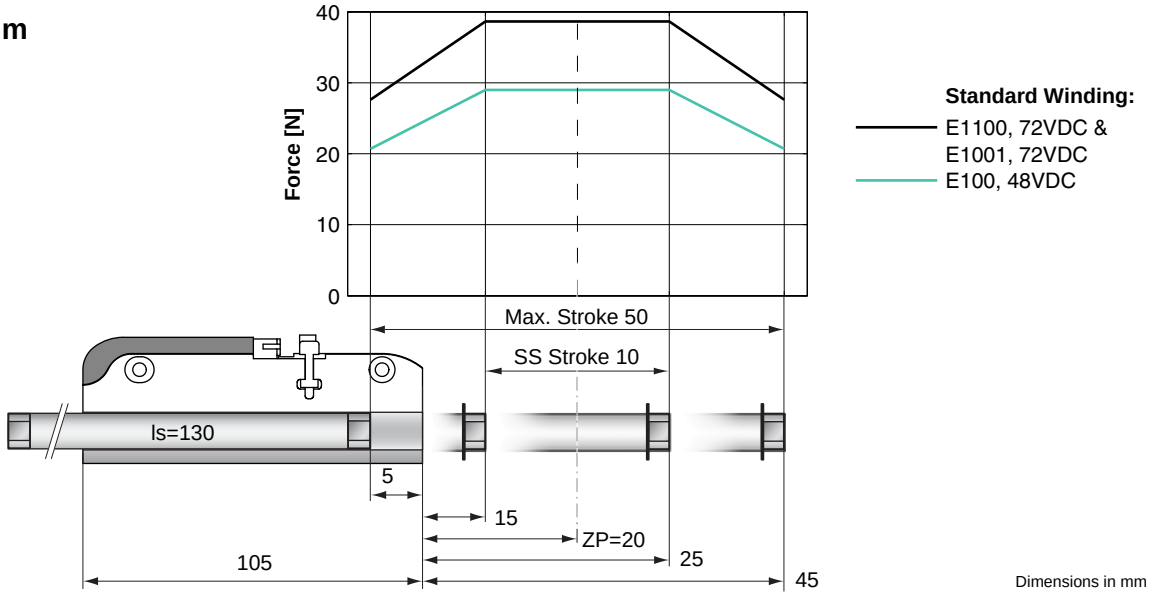

Motor Specification

		P02-23Sx80/10x50
Extended Stroke ES	mm (in)	50 (1.97)
Standard Stroke SS	mm (in)	10 (0.39)
Peak Force E1100 / E1001	N (lbf)	39 (8.7)
Peak Force E100	N (lbf)	29 (6.5)
Cont. Force	N (lbf)	8 (1.7)
Cont. Force Fan cooling	N (lbf)	14 (3.2)
Border Force	%	71
Force Constant	N/A (lbf/A)	9.7 (2.17)
Max. Current @ 72VDC	A	4.0
Max. Current @ 48VDC	A	3.8
Max. Velocity @ 72VDC	m/s (in/s)	6.9 (270)
Max. Velocity @ 48VDC	m/s (in/s)	4.6 (180)
Phase Resist. 25/80 °C	Ohm	10.3/12.5
Phase Inductance	mH	1.4
Thermal Resistance	°K/W	7.0
Thermal Time Const.	sec	900
Stator Diameter	mm (in)	23 (0.91)
Stator Length	mm (in)	105 (4.13)
Stator Mass	g (lb)	245 (0.54)
Slider Diameter	mm (in)	12 (0.47)
Slider Length	mm (in)	130 (5.12)
Slider Mass	g (lb)	89 (0.20)
Position Repeatability	mm (in)	±0.05 (±0.0020)
Linearity	%	±0.70
Repeatability with EPS	mm (in)	±0.01 (±0.0004)
Linearity with EPS	mm (in)	±0.01 (±0.0004)

Position-Time Diagram

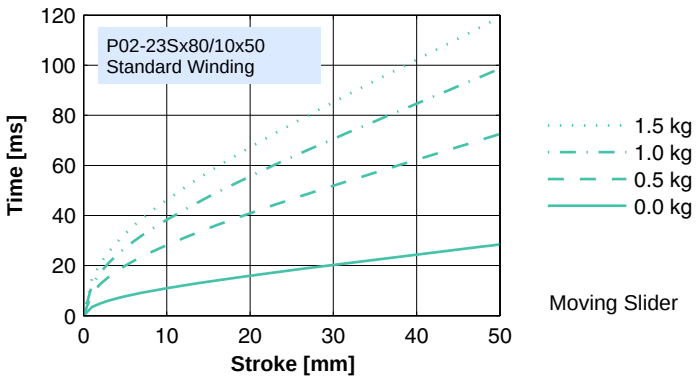

Stator

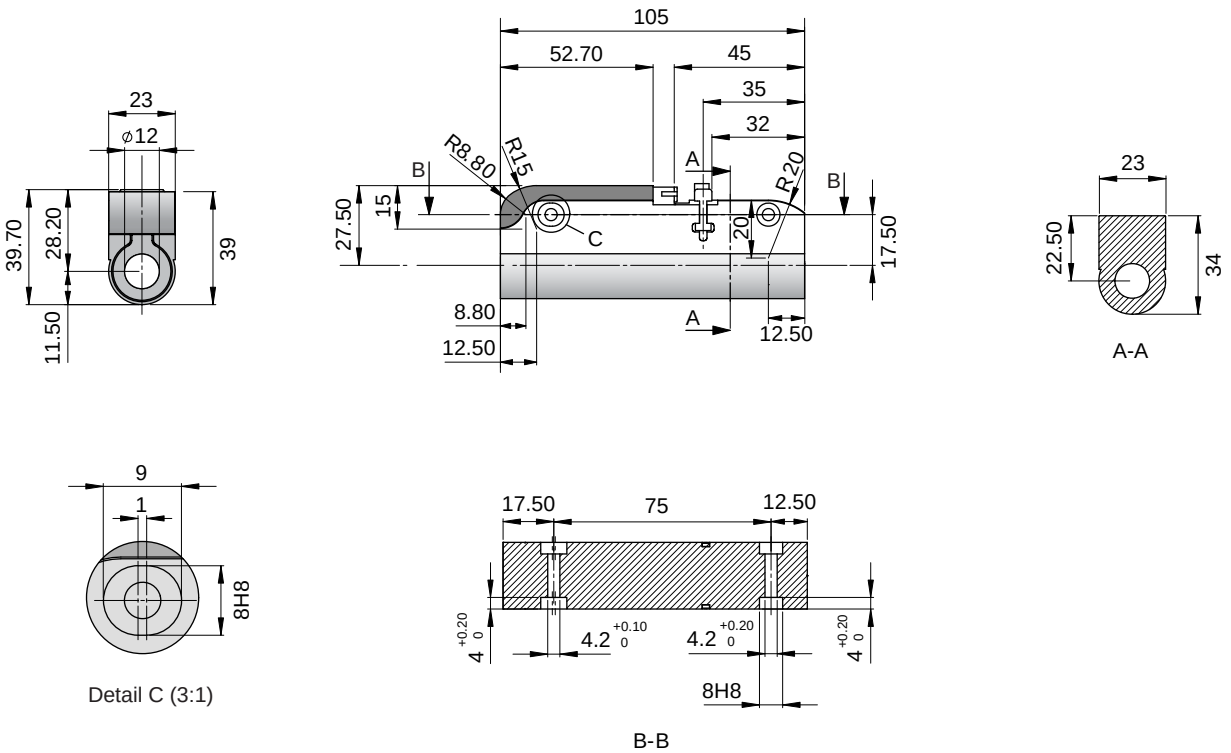

Linear Motor		Stator			Slider	
Type	Art.No	Type	Art. No.		Type	Art No.
P02-23Sx80/10x50	-->	PS02-23Sx80-F	0150-1272	&	PL01-12x130/80	0150-1399

Slider

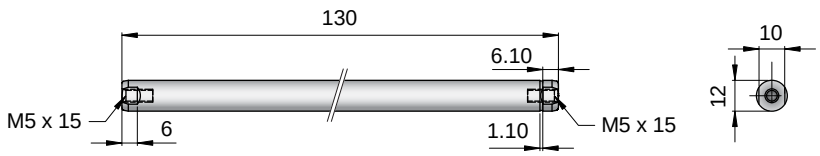

Standard Type	Slider Standard		PL01-12x130/80	0150-1399
Special Sliders	Heavy Duty Slider	with WC/C-Coating	PL02-12x130/80	0150-1424
	Hollow Slider	hole diameter 4.2mm	PL01-12x130/80-L	0150-1445

Connectors

Motor connector Wiring	
Pin 1	Phase 2-
Pin 2	Phase 2-
Pin 3	Phase 1-
Pin 4	Phase 1-
Pin 5	+5V
Pin 6	Temp
Pin 7	GND
Pin 8	Cosine
Pin 9	Sine
Pin 10	Phase 2+
Pin 11	Phase 2+
Pin 12	Phase 1+
Pin 13	Phase 1+

Accessoires

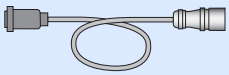

Standard Cable p. 508

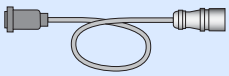

High Flex Cable p. 508

Servo Drive:
E100, E1001, E1100, B1100 p. 315

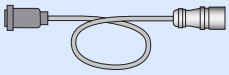

Robotic Cable p. 508

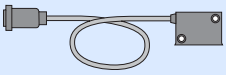

Optional Linear Encoder p. 526

Max. Stroke: 90mm
Peak Force: 44N

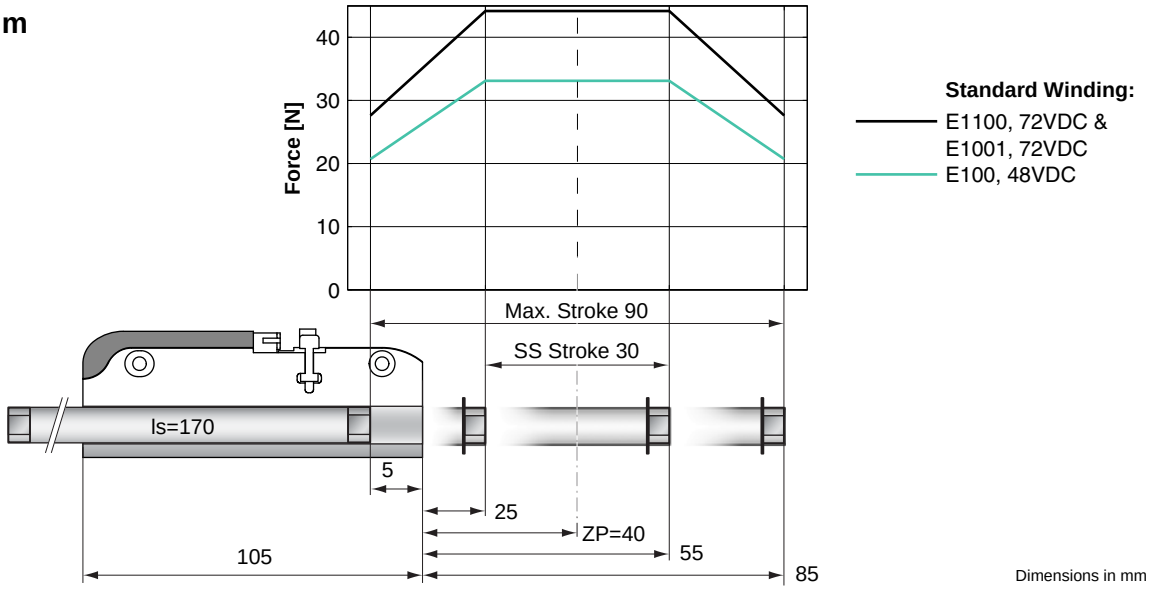

Motor Specification

		P02-23Sx80/30x90
Extended Stroke ES	mm (in)	90 (3.54)
Standard Stroke SS	mm (in)	30 (1.18)
Peak Force E1100 / E1001	N (lbf)	44 (9.9)
Peak Force E100	N (lbf)	33 (7.4)
Cont. Force	N (lbf)	9 (2.0)
Cont. Force Fan cooling	N (lbf)	16 (3.7)
Border Force	%	63
Force Constant	N/A (lbf/A)	11.0 (2.48)
Max. Current @ 72VDC	A	4.0
Max. Current @ 48VDC	A	3.8
Max. Velocity @ 72VDC	m/s (in/s)	6.0 (236)
Max. Velocity @ 48VDC	m/s (in/s)	4.0 (157)
Phase Resist. 25/80 °C	Ohm	10.3/12.5
Phase Inductance	mH	1.4
Thermal Resistance	°K/W	7.0
Thermal Time Const.	sec	900
Stator Diameter	mm (in)	23 (0.91)
Stator Length	mm (in)	105 (4.13)
Stator Mass	g (lb)	245 (0.54)
Slider Diameter	mm (in)	12 (0.47)
Slider Length	mm (in)	170 (6.69)
Slider Mass	g (lb)	118 (0.26)
Position Repeatability	mm (in)	±0.05 (±0.0020)
Linearity	%	±0.45
Repeatability with EPS	mm (in)	±0.01 (±0.0004)
Linearity with EPS	mm (in)	±0.01 (±0.0004)

Position-Time Diagram

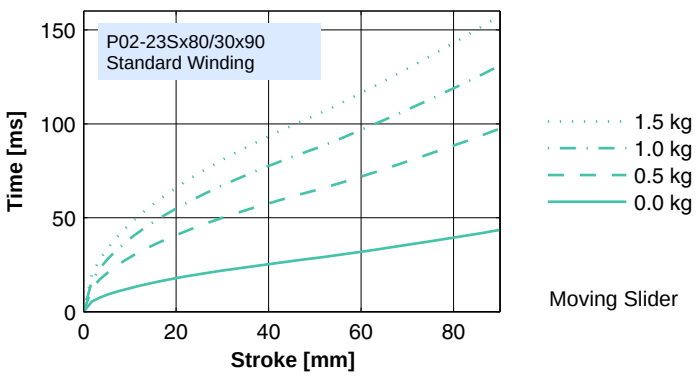

Stator

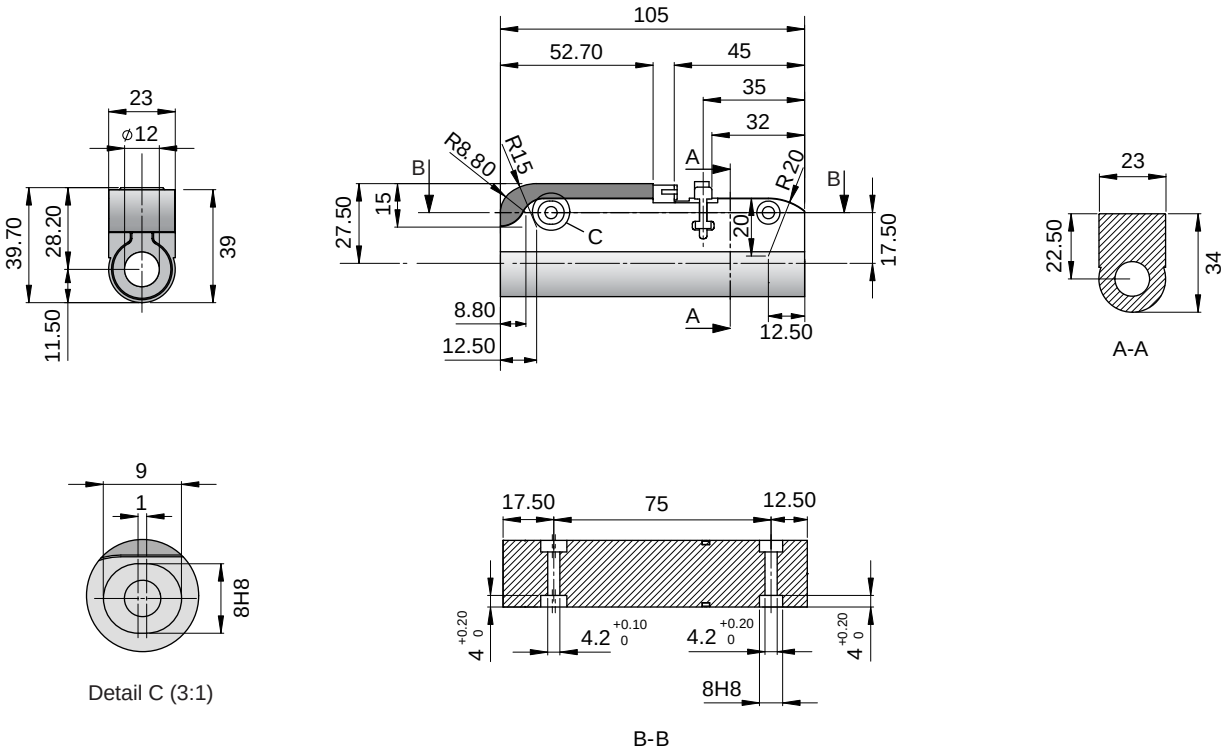

Linear Motor		Stator			Slider	
Type	Art.No	Type	Art. No.		Type	Art No.
P02-23Sx80/30x90	-->	PS02-23Sx80-F	0150-1272	&	PL01-12x170/120	0150-1301

Slider

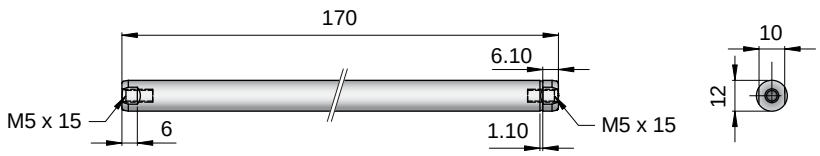

Standard Type	Slider Standard		PL01-12x170/120	0150-1301
Special Sliders	Heavy Duty Slider	with WC/C-Coating	PL02-12x170/120	0150-1303
	Hollow Slider	hole diameter 4.2mm	PL01-12x170/120-L	0150-1375

Connectors

Motor connector Wiring	
Pin 1	Phase 2-
Pin 2	Phase 2-
Pin 3	Phase 1-
Pin 4	Phase 1-
Pin 5	+5V
Pin 6	Temp
Pin 7	GND
Pin 8	Cosine
Pin 9	Sine
Pin 10	Phase 2+
Pin 11	Phase 2+
Pin 12	Phase 1+
Pin 13	Phase 1+

Accessoires

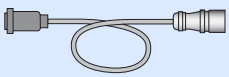

Standard Cable p. 508

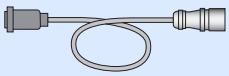

High Flex Cable p. 508

Servo Drive:
E100, E1001, E1100, B1100 p. 315

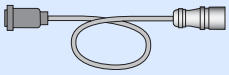

Robotic Cable p. 508

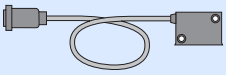

Optional Linear Encoder p. 526

Max. Stroke: 110mm
Peak Force: 44N

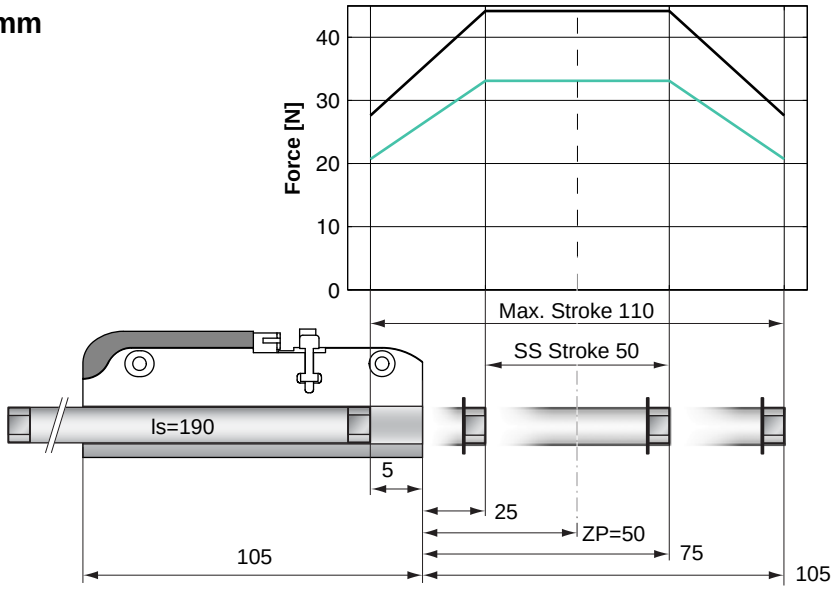

Standard Winding:
E1100, 72VDC &
E1001, 72VDC
E100, 48VDC

Dimensions in mm

Motor Specification

		P02-23Sx80/50x110
Extended Stroke ES	mm (in)	110 (4.33)
Standard Stroke SS	mm (in)	50 (1.97)
Peak Force E1100 / E1001	N (lbf)	44 (9.9)
Peak Force E100	N (lbf)	33 (7.4)
Cont. Force	N (lbf)	9 (2.0)
Cont. Force Fan cooling	N (lbf)	16 (3.7)
Border Force	%	63
Force Constant	N/A (lbf/A)	11.0 (2.48)
Max. Current @ 72VDC	A	4.0
Max. Current @ 48VDC	A	3.8
Max. Velocity @ 72VDC	m/s (in/s)	6.0 (236)
Max. Velocity @ 48VDC	m/s (in/s)	4.0 (157)
Phase Resist. 25/80 °C	Ohm	10.3/12.5
Phase Inductance	mH	1.4
Thermal Resistance	°K/W	7.0
Thermal Time Const.	sec	900
Stator Diameter	mm (in)	23 (0.91)
Stator Length	mm (in)	105 (4.13)
Stator Mass	g (lb)	245 (0.54)
Slider Diameter	mm (in)	12 (0.47)
Slider Length	mm (in)	190 (7.48)
Slider Mass	g (lb)	135 (0.30)
Position Repeatability	mm (in)	±0.05 (±0.0020)
Linearity	%	±0.40
Repeatability with EPS	mm (in)	±0.01 (±0.0004)
Linearity with EPS	mm (in)	±0.01 (±0.0004)

Position-Time Diagram

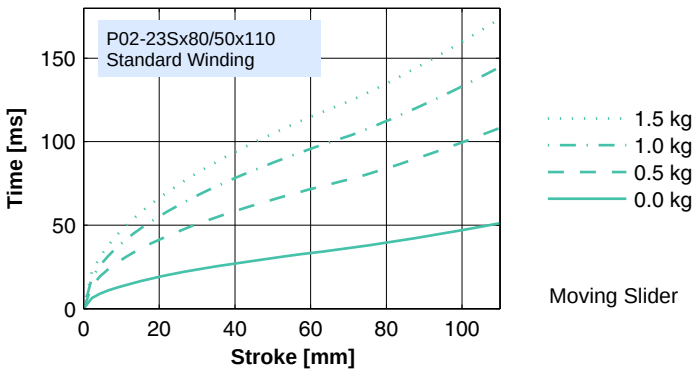

Stator

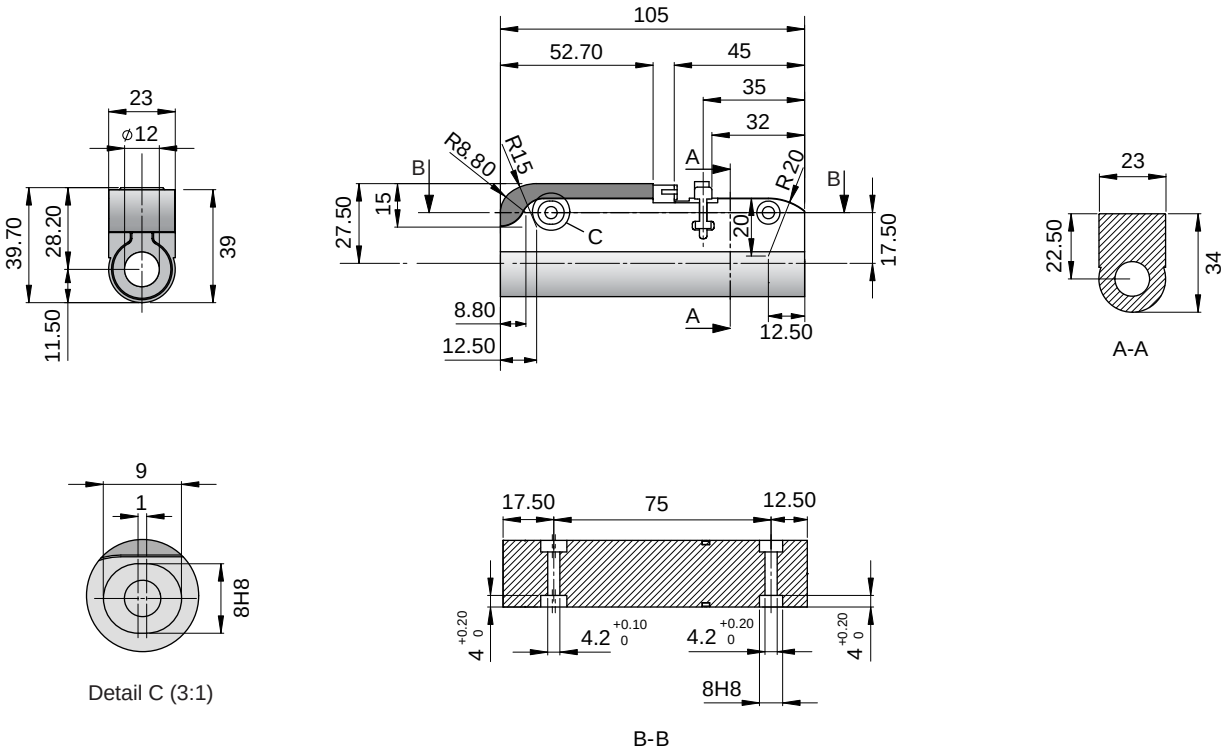

Linear Motor		Stator			Slider	
Type	Art.No	Type	Art. No.		Type	Art No.
P02-23Sx80/50x110	-->	PS02-23Sx80-F	0150-1272	&	PL01-12x190/140	0150-1302

Slider

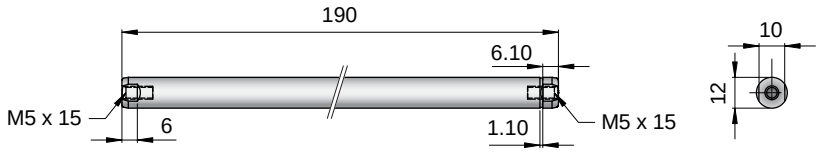

Standard Type	Slider Standard		PL01-12x190/140	0150-1302
Special Sliders	Heavy Duty Slider	with WC/C-Coating	PL02-12x190/140	0150-1304
	Hollow Slider	hole diameter 4.2mm	PL01-12x190/140-L	0150-1478

Connectors

Motor connector Wiring	
Pin 1	Phase 2-
Pin 2	Phase 2-
Pin 3	Phase 1-
Pin 4	Phase 1-
Pin 5	+5V
Pin 6	Temp
Pin 7	GND
Pin 8	Cosine
Pin 9	Sine
Pin 10	Phase 2+
Pin 11	Phase 2+
Pin 12	Phase 1+
Pin 13	Phase 1+

Accessoires

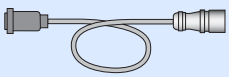

Standard Cable p. 508

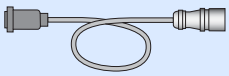

High Flex Cable p. 508

Servo Drive:
E100, E1001, E1100, B1100 p. 315

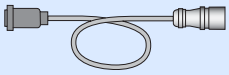

Robotic Cable p. 508

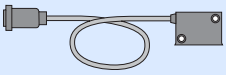

Optional Linear Encoder p. 526

Max. Stroke: 140mm
Peak Force: 44N

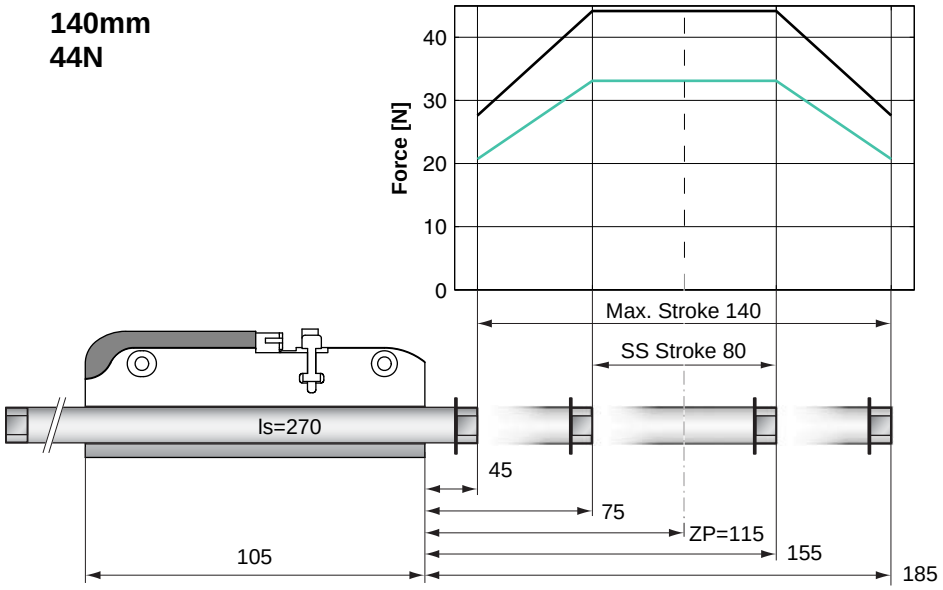

Standard Winding:
E1100, 72VDC &
E1001, 72VDC
E100, 48VDC

Dimensions in mm

Motor Specification

		P02-23Sx80/80x140
Extended Stroke ES	mm (in)	140 (5.51)
Standard Stroke SS	mm (in)	80 (3.15)
Peak Force E1100 / E1001	N (lbf)	44 (9.9)
Peak Force E100	N (lbf)	33 (7.4)
Cont. Force	N (lbf)	9 (2.0)
Cont. Force Fan cooling	N (lbf)	16 (3.7)
Border Force	%	63
Force Constant	N/A (lbf/A)	11.0 (2.48)
Max. Current @ 72VDC	A	4.0
Max. Current @ 48VDC	A	3.8
Max. Velocity @ 72VDC	m/s (in/s)	6.0 (236)
Max. Velocity @ 48VDC	m/s (in/s)	4.0 (157)
Phase Resist. 25/80 °C	Ohm	10.3/12.5
Phase Inductance	mH	1.4
Thermal Resistance	°K/W	7.0
Thermal Time Const.	sec	900
Stator Diameter	mm (in)	23 (0.91)
Stator Length	mm (in)	105 (4.13)
Stator Mass	g (lb)	245 (0.54)
Slider Diameter	mm (in)	12 (0.47)
Slider Length	mm (in)	270 (10.63)
Slider Mass	g (lb)	171 (0.38)
Position Repeatability	mm (in)	±0.05 (±0.0020)
Linearity	%	±0.35
Repeatability with EPS	mm (in)	±0.01 (±0.0004)
Linearity with EPS	mm (in)	±0.01 (±0.0004)

Position-Time Diagram

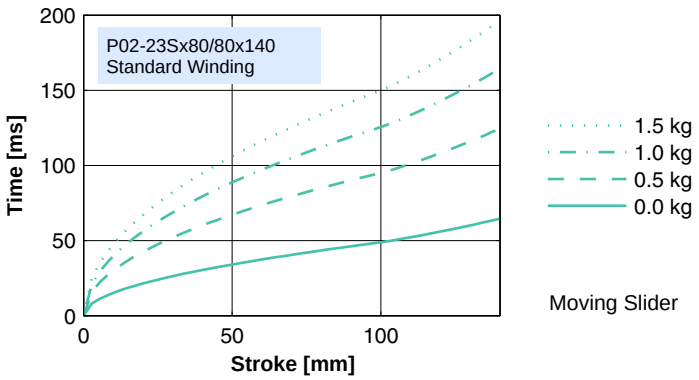

Stator

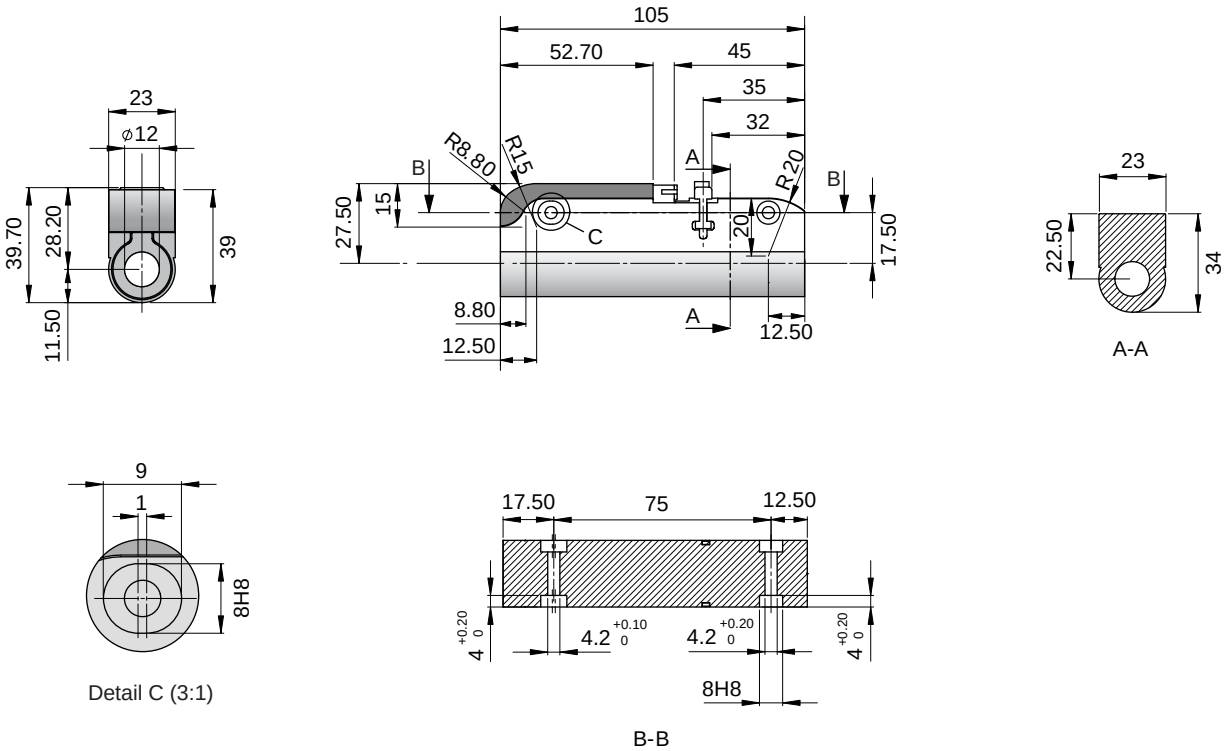

Linear Motor		Stator			Slider	
Type	Art.No	Type	Art. No.		Type	Art No.
P02-23Sx80/80x140	-->	PS02-23Sx80-F	0150-1272	&	PL01-12x270/170	0150-1307

Slider

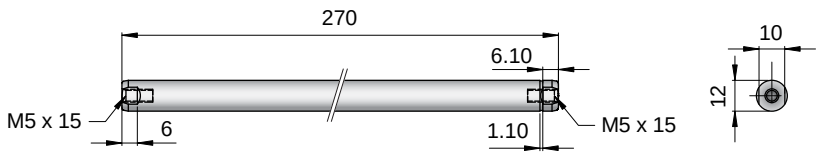

Standard Type	Slider Standard		PL01-12x270/170	0150-1307
Special Sliders	Heavy Duty Slider	with WC/C-Coating	PL02-12x270/170	0150-1310
	Hollow Slider	hole diameter 4.2mm	PL01-12x270/170-L	0150-1393

Connectors

Motor connector Wiring

Pin 1	Phase 2-
Pin 2	Phase 2-
Pin 3	Phase 1-
Pin 4	Phase 1-
Pin 5	+5V
Pin 6	Temp
Pin 7	GND
Pin 8	Cosine
Pin 9	Sine
Pin 10	Phase 2+
Pin 11	Phase 2+
Pin 12	Phase 1+
Pin 13	Phase 1+

Accessoires

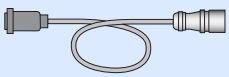

Standard Cable p. 508

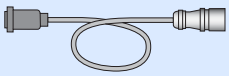

High Flex Cable p. 508

Servo Drive:
E100, E1001, E1100, B1100 p. 315

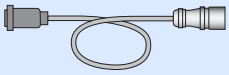

Robotic Cable p. 508

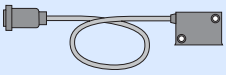

Optional Linear Encoder p. 526

Max. Stroke: 210mm
Peak Force: 44N

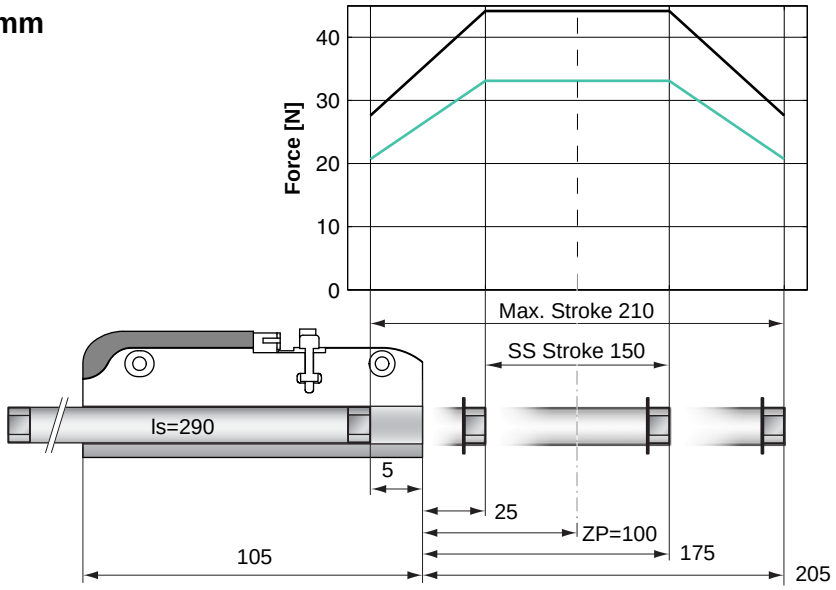

Standard Winding:
E1100, 72VDC &
E1001, 72VDC
E100, 48VDC

Dimensions in mm

Motor Specification

		P02-23Sx80/150x210
Extended Stroke ES	mm (in)	210 (8.27)
Standard Stroke SS	mm (in)	150 (5.91)
Peak Force E1100 / E1001	N (lbf)	44 (9.9)
Peak Force E100	N (lbf)	33 (7.4)
Cont. Force	N (lbf)	9 (2.0)
Cont. Force Fan cooling	N (lbf)	16 (3.7)
Border Force	%	63
Force Constant	N/A (lbf/A)	11.0 (2.48)
Max. Current @ 72VDC	A	4.0
Max. Current @ 48VDC	A	3.8
Max. Velocity @ 72VDC	m/s (in/s)	6.0 (236)
Max. Velocity @ 48VDC	m/s (in/s)	4.0 (157)
Phase Resist. 25/80 °C	Ohm	10.3/12.5
Phase Inductance	mH	1.4
Thermal Resistance	°K/W	7.0
Thermal Time Const.	sec	900
Stator Diameter	mm (in)	23 (0.91)
Stator Length	mm (in)	105 (4.13)
Stator Mass	g (lb)	245 (0.54)
Slider Diameter	mm (in)	12 (0.47)
Slider Length	mm (in)	290 (11.42)
Slider Mass	g (lb)	220 (0.49)
Position Repeatability	mm (in)	±0.05 (±0.0020)
Linearity	%	±0.30
Repeatability with EPS	mm (in)	±0.01 (±0.0004)
Linearity with EPS	mm (in)	±0.01 (±0.0004)

Position-Time Diagram

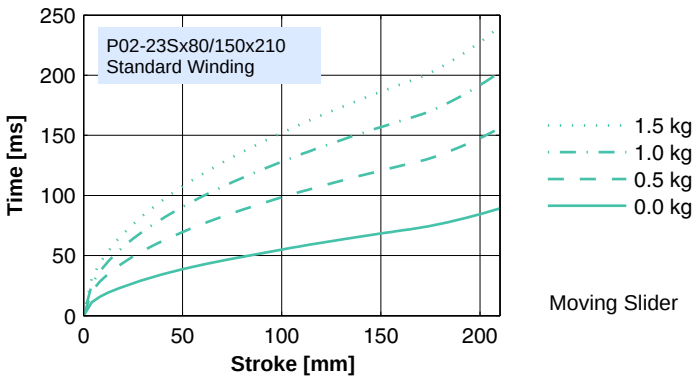

Stator

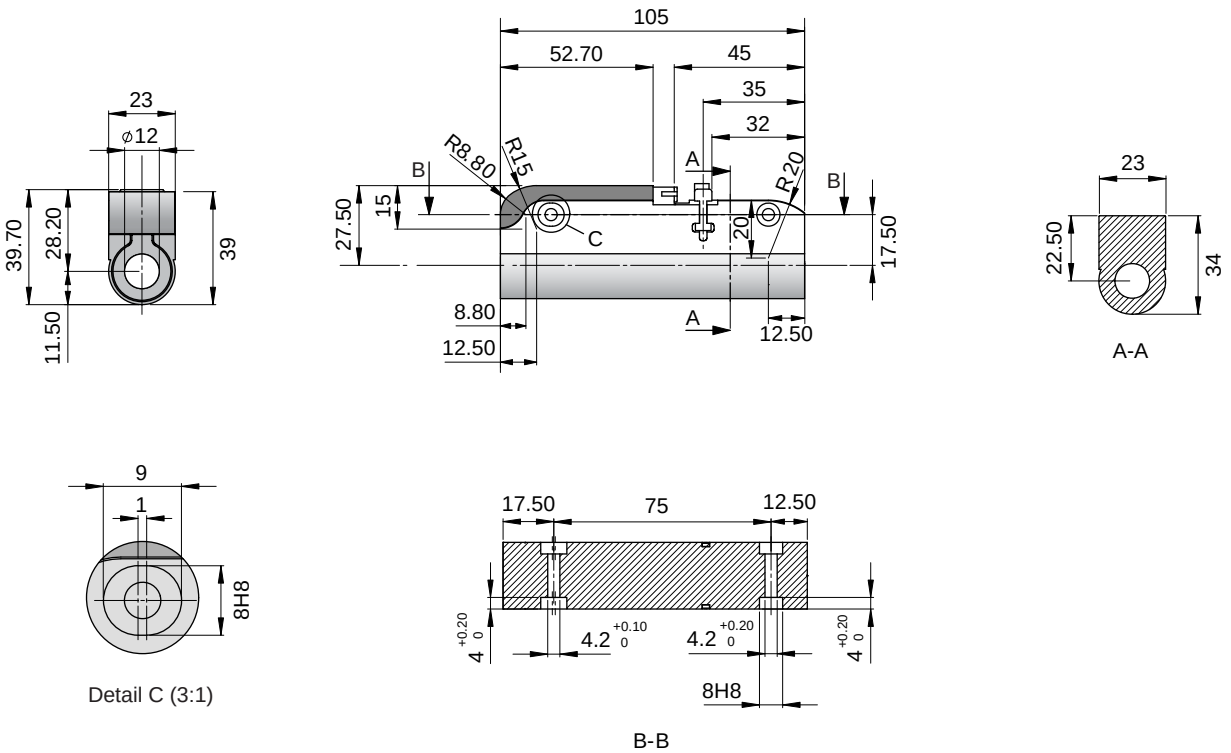

Linear Motor		Stator			Slider	
Type	Art.No	Type	Art. No.		Type	Art No.
P02-23Sx80/150x210	-->	PS02-23Sx80-F	0150-1272	&	PL01-12x290/240	0150-1320

Slider

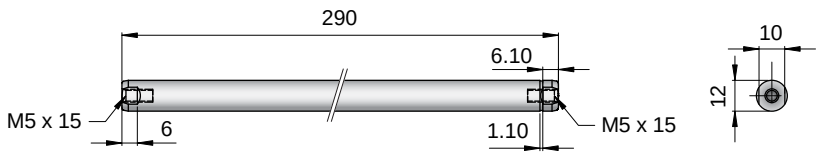

Standard Type	Slider Standard		PL01-12x290/240	0150-1320
Special Sliders	Heavy Duty Slider	with WC/C-Coating	PL02-12x290/240	0150-1321
	Hollow Slider	hole diameter 4.2mm	PL01-12x290/240-L	0150-1363

Connectors

Motor connector Wiring	
Pin 1	Phase 2-
Pin 2	Phase 2-
Pin 3	Phase 1-
Pin 4	Phase 1-
Pin 5	+5V
Pin 6	Temp
Pin 7	GND
Pin 8	Cosine
Pin 9	Sine
Pin 10	Phase 2+
Pin 11	Phase 2+
Pin 12	Phase 1+
Pin 13	Phase 1+

Accessoires

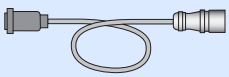

Standard Cable p. 508

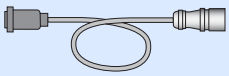

High Flex Cable p. 508

Servo Drive:
E100, E1001, E1100, B1100 p. 315

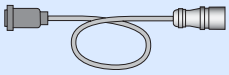

Robotic Cable p. 508

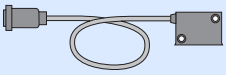

Optional Linear Encoder p. 526

Max. Stroke: 270mm
Peak Force: 44N

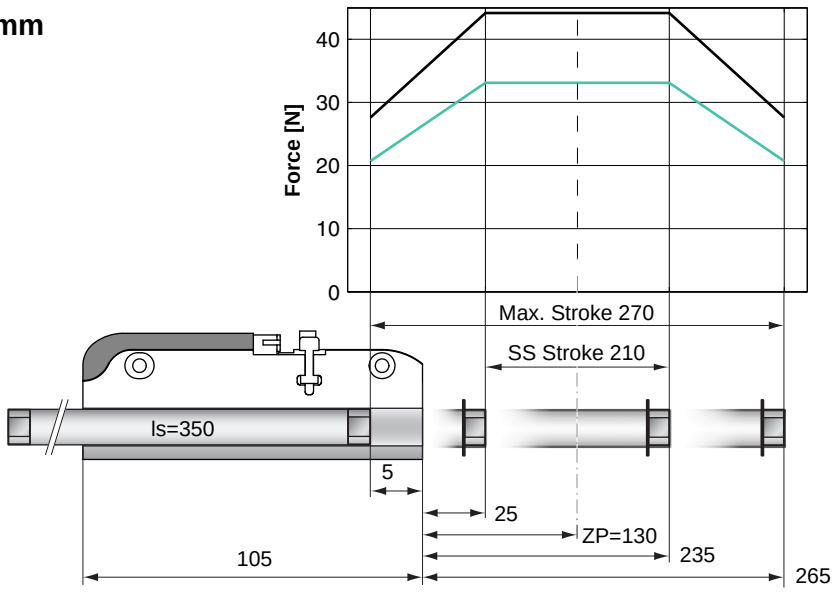

Standard Winding:
E1100, 72VDC &
E1001, 72VDC
E100, 48VDC

Dimensions in mm

Motor Specification

		P02-23Sx80/210x270
Extended Stroke ES	mm (in)	270 (10.63)
Standard Stroke SS	mm (in)	210 (8.27)
Peak Force E1100 / E1001	N (lbf)	44 (9.9)
Peak Force E100	N (lbf)	33 (7.4)
Cont. Force	N (lbf)	9 (2.0)
Cont. Force Fan cooling	N (lbf)	16 (3.7)
Border Force	%	63
Force Constant	N/A (lbf/A)	11.0 (2.48)
Max. Current @ 72VDC	A	4.0
Max. Current @ 48VDC	A	3.8
Max. Velocity @ 72VDC	m/s (in/s)	6.0 (236)
Max. Velocity @ 48VDC	m/s (in/s)	4.0 (157)
Phase Resist. 25/80 °C	Ohm	10.3/12.5
Phase Inductance	mH	1.4
Thermal Resistance	°K/W	7.0
Thermal Time Const.	sec	900
Stator Diameter	mm (in)	23 (0.91)
Stator Length	mm (in)	105 (4.13)
Stator Mass	g (lb)	245 (0.54)
Slider Diameter	mm (in)	12 (0.47)
Slider Length	mm (in)	350 (13.78)
Slider Mass	g (lb)	271 (0.60)
Position Repeatability	mm (in)	±0.05 (±0.0020)
Linearity	%	±0.25
Repeatability with EPS	mm (in)	±0.01 (±0.0004)
Linearity with EPS	mm (in)	±0.01 (±0.0004)

Position-Time Diagram

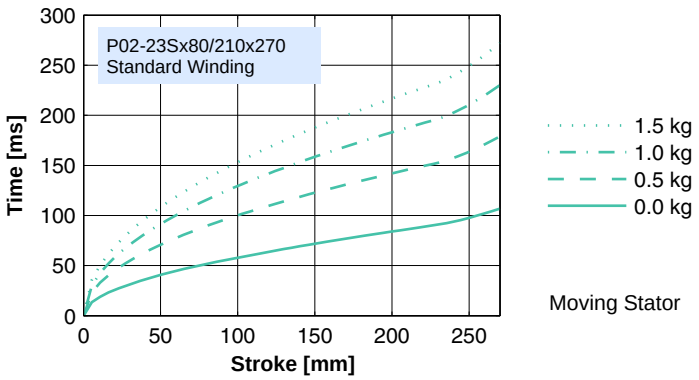

Moving Stator

Stator

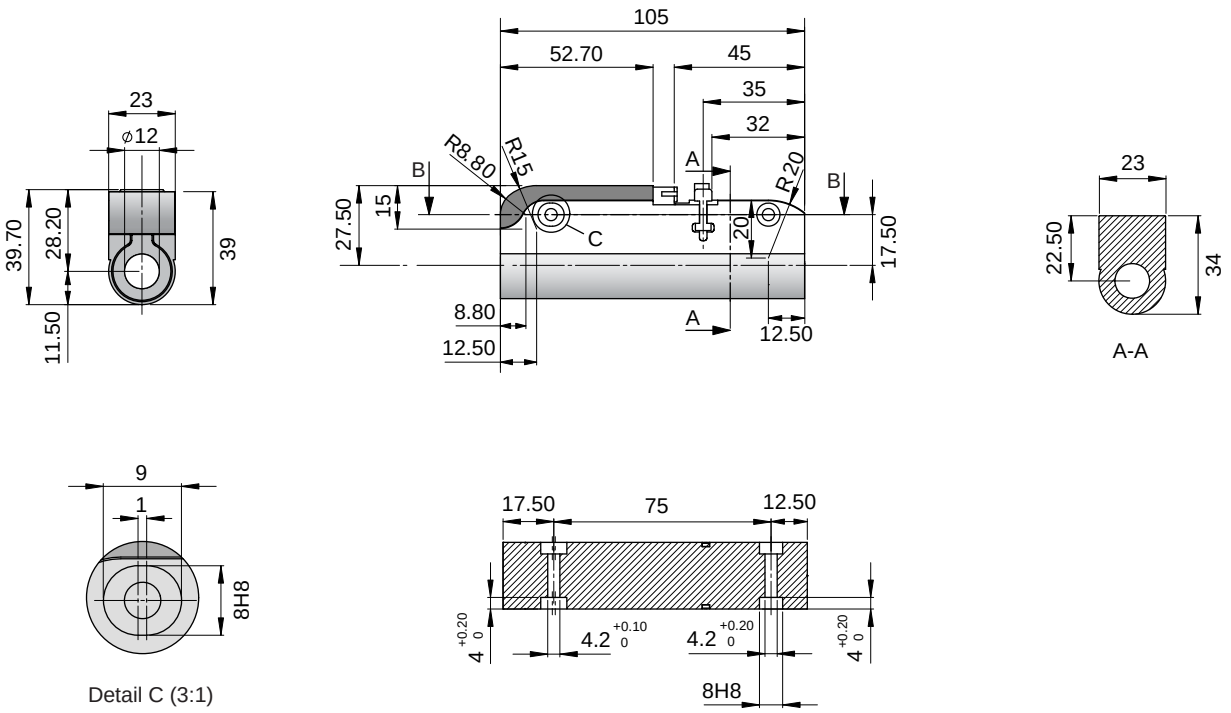

Linear Motor		Stator			Slider	
Type	Art.No	Type	Art. No.		Type	Art No.
P02-23Sx80/210x270	-->	PS02-23Sx80-F	0150-1272	&	PL01-12x350/300	0150-1322

Slider

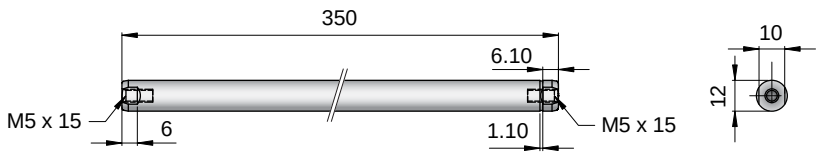

Standard Type	Slider Standard		PL01-12x350/300	0150-1322
Special Sliders	Heavy Duty Slider	with WC/C-Coating	PL02-12x350/300	0150-1323
	Hollow Slider	hole diameter 4.2mm	PL01-12x350/300-L	0150-1479

Connectors

Motor connector Wiring	
Pin 1	Phase 2-
Pin 2	Phase 2-
Pin 3	Phase 1-
Pin 4	Phase 1-
Pin 5	+5V
Pin 6	Temp
Pin 7	GND
Pin 8	Cosine
Pin 9	Sine
Pin 10	Phase 2+
Pin 11	Phase 2+
Pin 12	Phase 1+
Pin 13	Phase 1+

Accessoires

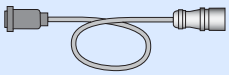

Standard Cable p. 508

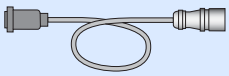

High Flex Cable p. 508

Servo Drive:
E100, E1001, E1100, B1100 p. 315

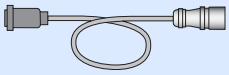

Robotic Cable p. 508

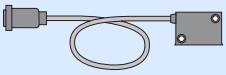

Optional Linear Encoder p. 526

Max. Stroke: 340mm
Peak Force: 44N

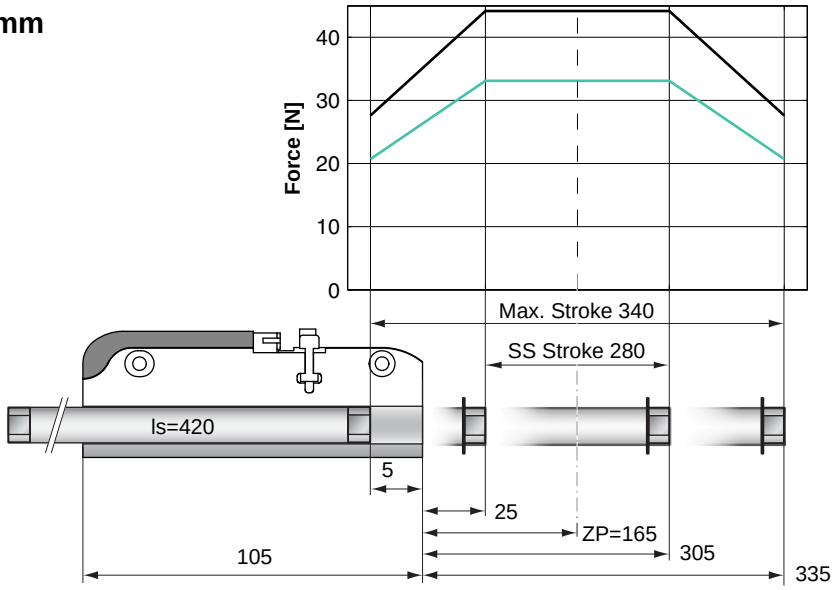

Standard Winding:
E1100, 72VDC &
E1001, 72VDC
E100, 48VDC

Dimensions in mm

Motor Specification

		P02-23Sx80/280x340
Extended Stroke ES	mm (in)	340 (13.39)
Standard Stroke SS	mm (in)	280 (11.02)
Peak Force E1100 / E1001	N (lbf)	44 (9.9)
Peak Force E100	N (lbf)	33 (7.4)
Cont. Force	N (lbf)	9 (2.0)
Cont. Force Fan cooling	N (lbf)	16 (3.7)
Border Force	%	63
Force Constant	N/A (lbf/A)	11.0 (2.48)
Max. Current @ 72VDC	A	4.0
Max. Current @ 48VDC	A	3.8
Max. Velocity @ 72VDC	m/s (in/s)	6.0 (236)
Max. Velocity @ 48VDC	m/s (in/s)	4.0 (157)
Phase Resist. 25/80 °C	Ohm	10.3/12.5
Phase Inductance	mH	1.4
Thermal Resistance	°K/W	7.0
Thermal Time Const.	sec	900
Stator Diameter	mm (in)	23 (0.91)
Stator Length	mm (in)	105 (4.13)
Stator Mass	g (lb)	245 (0.54)
Slider Diameter	mm (in)	12 (0.47)
Slider Length	mm (in)	420 (16.54)
Slider Mass	g (lb)	330 (0.73)
Position Repeatability	mm (in)	±0.05 (±0.0020)
Linearity	%	±0.25
Repeatability with EPS	mm (in)	±0.01 (±0.0004)
Linearity with EPS	mm (in)	±0.01 (±0.0004)

Position-Time Diagram

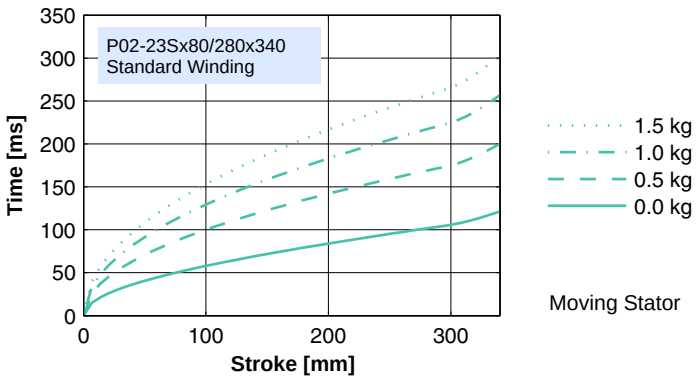

Stator

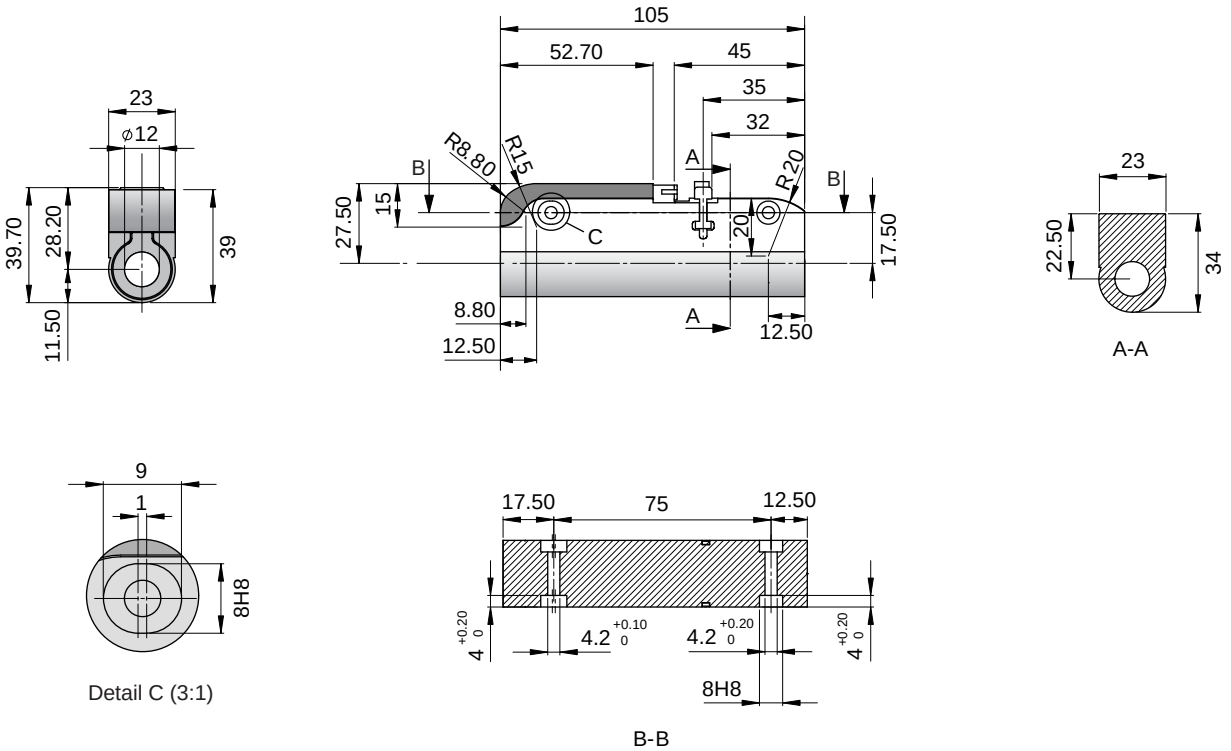

Linear Motor		Stator			Slider	
Type	Art.No	Type	Art. No.		Type	Art No.
P02-23Sx80/280x340	-->	PS02-23Sx80-F	0150-1272	&	PL01-12x420/370	0150-1324

Slider

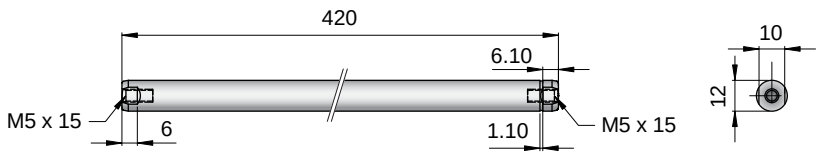

Standard Type	Slider Standard		PL01-12x420/370	0150-1324
Special Sliders	Heavy Duty Slider	with WC/C-Coating	PL02-12x420/370	0150-1325
	Hollow Slider	hole diameter 4.2mm	PL01-12x420/370-L	0150-1394

Connectors

Motor connector Wiring	
Pin 1	Phase 2-
Pin 2	Phase 2-
Pin 3	Phase 1-
Pin 4	Phase 1-
Pin 5	+5V
Pin 6	Temp
Pin 7	GND
Pin 8	Cosine
Pin 9	Sine
Pin 10	Phase 2+
Pin 11	Phase 2+
Pin 12	Phase 1+
Pin 13	Phase 1+

Accessoires

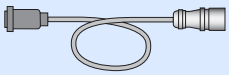

Standard Cable p. 508

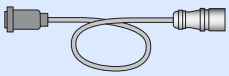

High Flex Cable p. 508

Servo Drive:
E100, E1001, E1100, B1100 p. 315

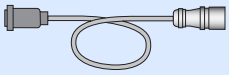

Robotic Cable p. 508

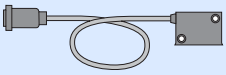

Optional Linear Encoder p. 526

Max. Stroke: 400mm
Peak Force: 44N

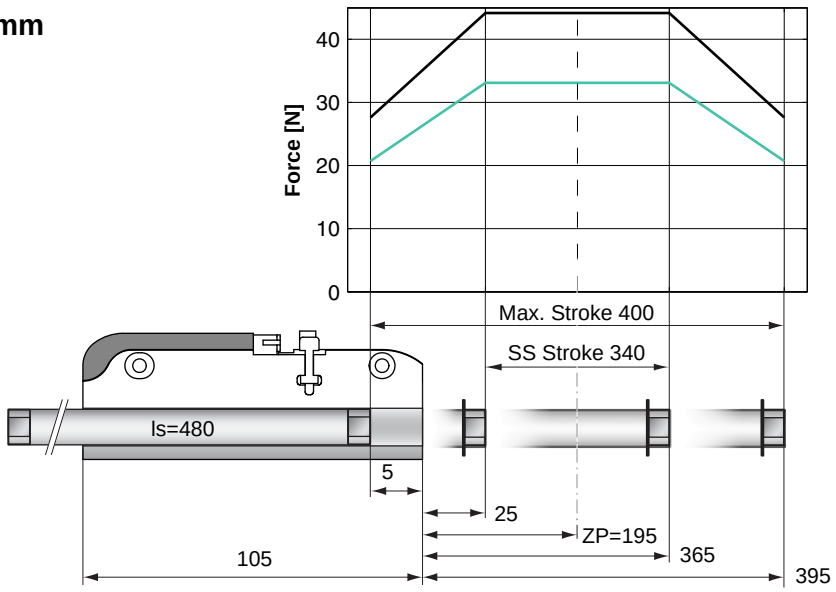

Standard Winding:
E1100, 72VDC &
E1001, 72VDC
E100, 48VDC

Dimensions in mm

Motor Specification

		P02-23Sx80/340x400
Extended Stroke ES	mm (in)	400 (15.75)
Standard Stroke SS	mm (in)	340 (13.39)
Peak Force E1100 / E1001	N (lbf)	44 (9.9)
Peak Force E100	N (lbf)	33 (7.4)
Cont. Force	N (lbf)	9 (2.0)
Cont. Force Fan cooling	N (lbf)	16 (3.7)
Border Force	%	63
Force Constant	N/A (lbf/A)	11.0 (2.48)
Max. Current @ 72VDC	A	4.0
Max. Current @ 48VDC	A	3.8
Max. Velocity @ 72VDC	m/s (in/s)	6.0 (236)
Max. Velocity @ 48VDC	m/s (in/s)	4.0 (157)
Phase Resist. 25/80 °C	Ohm	10.3/12.5
Phase Inductance	mH	1.4
Thermal Resistance	°K/W	7.0
Thermal Time Const.	sec	900
Stator Diameter	mm (in)	23 (0.91)
Stator Length	mm (in)	105 (4.13)
Stator Mass	g (lb)	245 (0.54)
Slider Diameter	mm (in)	12 (0.47)
Slider Length	mm (in)	480 (18.90)
Slider Mass	g (lb)	380 (0.84)
Position Repeatability	mm (in)	±0.05 (±0.0020)
Linearity	%	±0.25
Repeatability with EPS	mm (in)	±0.01 (±0.0004)
Linearity with EPS	mm (in)	±0.01 (±0.0004)

Position-Time Diagram

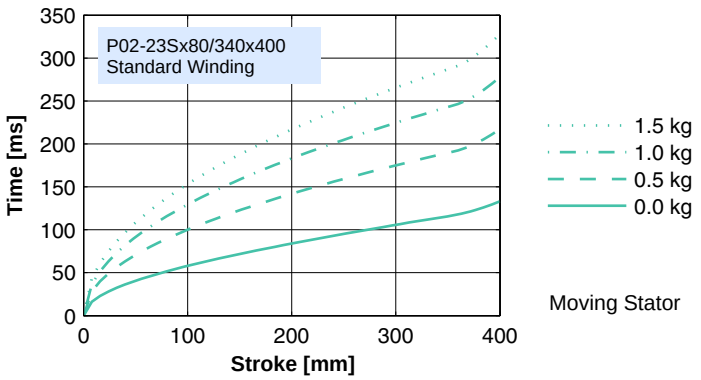

Stator

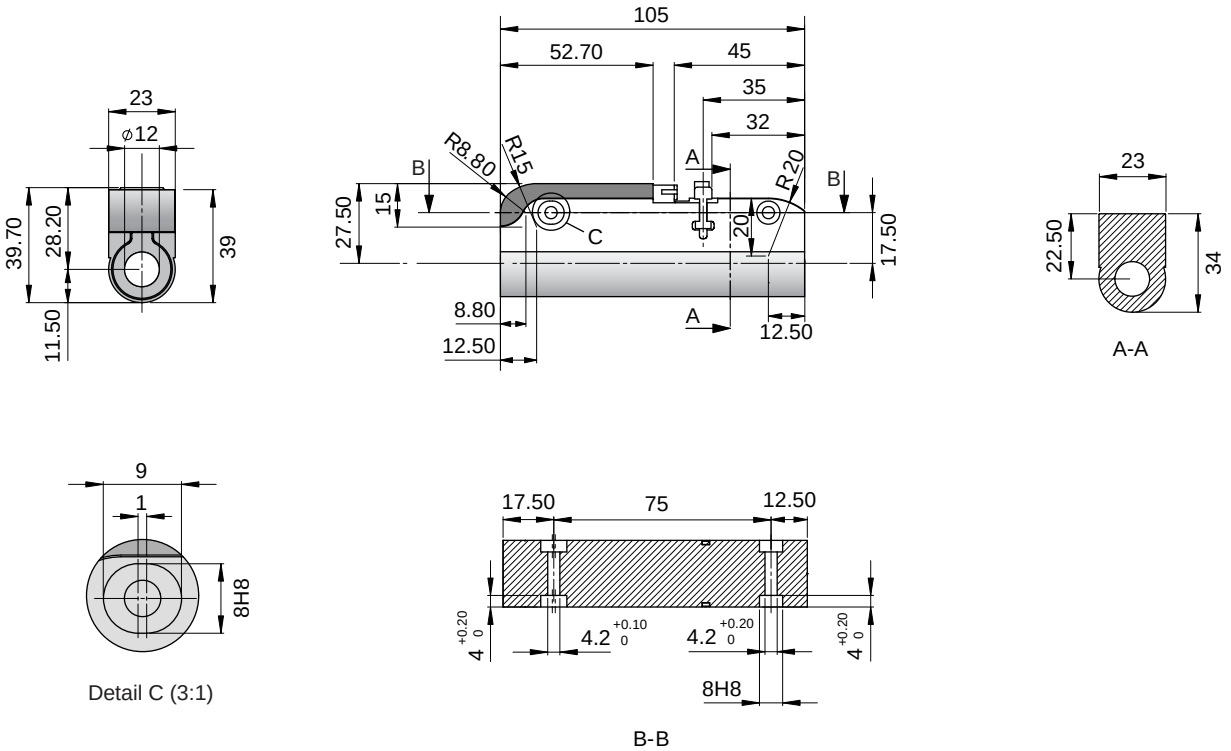

Linear Motor		Stator			Slider	
Type	Art.No	Type	Art. No.		Type	Art No.
P02-23Sx80/340x400	-->	PS02-23Sx80-F	0150-1272	&	PL01-12x480/430	0150-1372

Slider

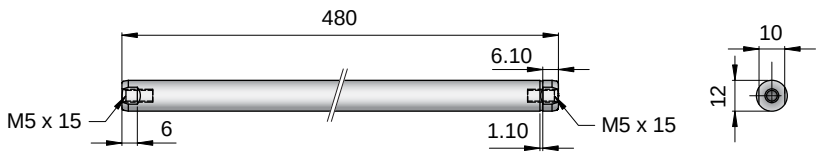

Standard Type	Slider Standard		PL01-12x480/430	0150-1372
Special Sliders	Heavy Duty Slider	with WC/C-Coating	PL02-12x480/430	0150-1373
	Hollow Slider	hole diameter 4.2mm	PL01-12x480/430-L	on request

Connectors

Motor connector Wiring	
Pin 1	Phase 2-
Pin 2	Phase 2-
Pin 3	Phase 1-
Pin 4	Phase 1-
Pin 5	+5V
Pin 6	Temp
Pin 7	GND
Pin 8	Cosine
Pin 9	Sine
Pin 10	Phase 2+
Pin 11	Phase 2+
Pin 12	Phase 1+
Pin 13	Phase 1+

Accessoires

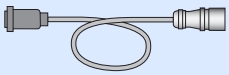

Standard Cable p. 508

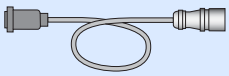

High Flex Cable p. 508

Servo Drive:
E100, E1001, E1100, B1100 p. 315

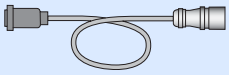

Robotic Cable p. 508

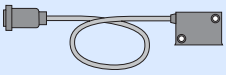

Optional Linear Encoder p. 526

Max. Stroke: 500mm
Peak Force: 44N

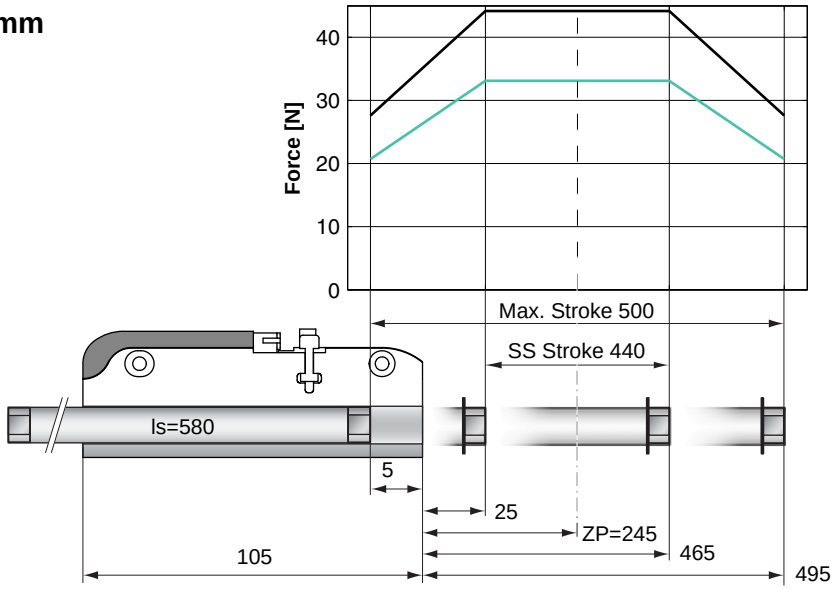

Standard Winding:
E1100, 72VDC &
E1001, 72VDC
E100, 48VDC

Dimensions in mm

Motor Specification

		P02-23Sx80/440x500
Extended Stroke ES	mm (in)	500 (19.69)
Standard Stroke SS	mm (in)	440 (17.32)
Peak Force E1100 / E1001	N (lbf)	44 (9.9)
Peak Force E100	N (lbf)	33 (7.4)
Cont. Force	N (lbf)	9 (2.0)
Cont. Force Fan cooling	N (lbf)	16 (3.7)
Border Force	%	63
Force Constant	N/A (lbf/A)	11.0 (2.48)
Max. Current @ 72VDC	A	4.0
Max. Current @ 48VDC	A	3.8
Max. Velocity @ 72VDC	m/s (in/s)	6.0 (236)
Max. Velocity @ 48VDC	m/s (in/s)	4.0 (157)
Phase Resist. 25/80 °C	Ohm	10.3/12.5
Phase Inductance	mH	1.4
Thermal Resistance	°K/W	7.0
Thermal Time Const.	sec	900
Stator Diameter	mm (in)	23 (0.91)
Stator Length	mm (in)	105 (4.13)
Stator Mass	g (lb)	245 (0.54)
Slider Diameter	mm (in)	12 (0.47)
Slider Length	mm (in)	580 (22.83)
Slider Mass	g (lb)	465 (1.03)
Position Repeatability	mm (in)	±0.05 (±0.0020)
Linearity	%	±0.20
Repeatability with EPS	mm (in)	±0.01 (±0.0004)
Linearity with EPS	mm (in)	±0.01 (±0.0004)

Position-Time Diagram

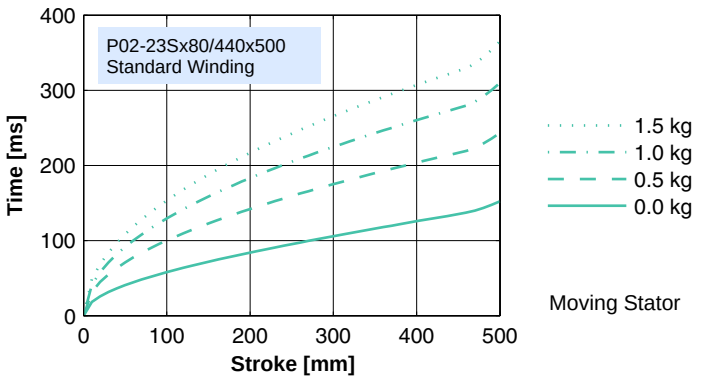

Stator

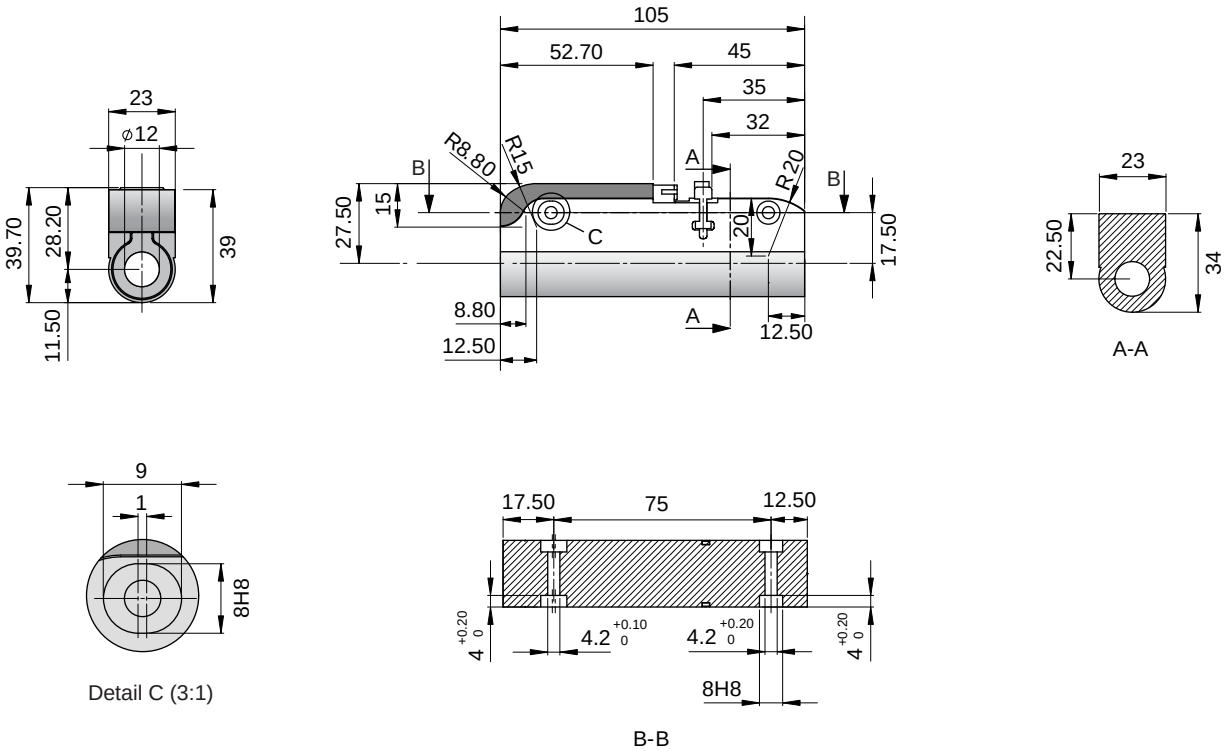

Linear Motor		Stator			Slider	
Type	Art.No	Type	Art. No.		Type	Art No.
P02-23Sx80/440x500	-->	PS02-23Sx80-F	0150-1272	&	PL01-12x580/530	0150-1355

Slider

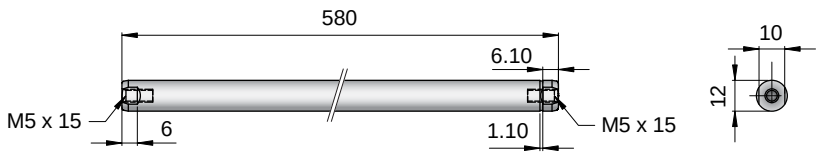

Standard Type	Slider Standard		PL01-12x580/530	0150-1355
Special Sliders	Heavy Duty Slider	with WC/C-Coating	PL02-12x580/530	0150-1356
	Hollow Slider	hole diameter 4.2mm	PL01-12x580/530-L	0150-1391

Connectors

Motor connector Wiring	
Pin 1	Phase 2-
Pin 2	Phase 2-
Pin 3	Phase 1-
Pin 4	Phase 1-
Pin 5	+5V
Pin 6	Temp
Pin 7	GND
Pin 8	Cosine
Pin 9	Sine
Pin 10	Phase 2+
Pin 11	Phase 2+
Pin 12	Phase 1+
Pin 13	Phase 1+

Accessoires

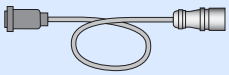

Standard Cable p. 508

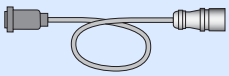

High Flex Cable p. 508

Servo Drive:
E100, E1001, E1100, B1100 p. 315

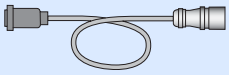

Robotic Cable p. 508

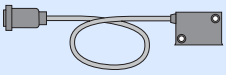

Optional Linear Encoder p. 526

Max. Stroke: 680mm
Peak Force: 44N

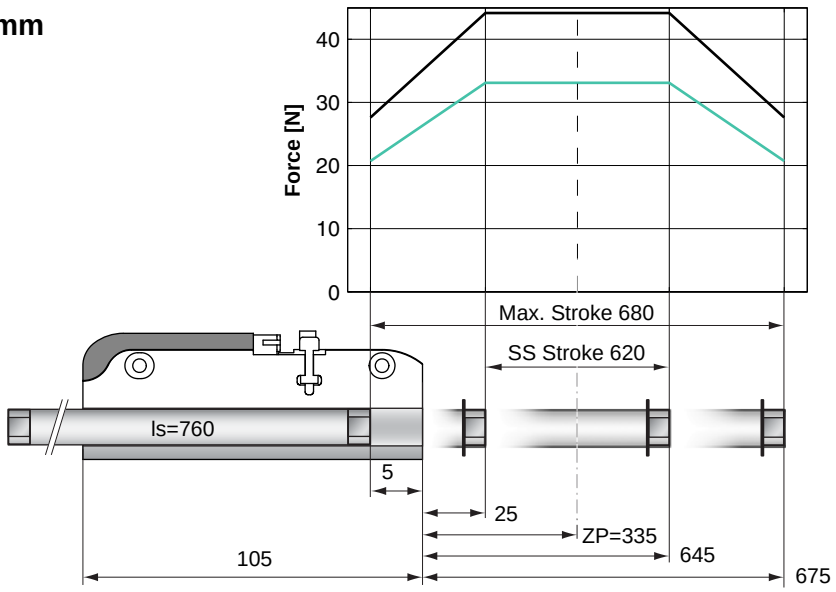

Standard Winding:
E1100, 72VDC &
E1001, 72VDC
E100, 48VDC

Dimensions in mm

Motor Specification

		P02-23Sx80/620x680
Extended Stroke ES	mm (in)	680 (26.77)
Standard Stroke SS	mm (in)	620 (24.41)
Peak Force E1100 / E1001	N (lbf)	44 (9.9)
Peak Force E100	N (lbf)	33 (7.4)
Cont. Force	N (lbf)	9 (2.0)
Cont. Force Fan cooling	N (lbf)	16 (3.7)
Border Force	%	63
Force Constant	N/A (lbf/A)	11.0 (2.48)
Max. Current @ 72VDC	A	4.0
Max. Current @ 48VDC	A	3.8
Max. Velocity @ 72VDC	m/s (in/s)	6.0 (236)
Max. Velocity @ 48VDC	m/s (in/s)	4.0 (157)
Phase Resist. 25/80 °C	Ohm	10.3/12.5
Phase Inductance	mH	1.4
Thermal Resistance	°K/W	7.0
Thermal Time Const.	sec	900
Stator Diameter	mm (in)	23 (0.91)
Stator Length	mm (in)	105 (4.13)
Stator Mass	g (lb)	245 (0.54)
Slider Diameter	mm (in)	12 (0.47)
Slider Length	mm (in)	760 (29.92)
Slider Mass	g (lb)	615 (1.36)
Position Repeatability	mm (in)	±0.05 (±0.0020)
Linearity	%	±0.20
Repeatability with EPS	mm (in)	±0.01 (±0.0004)
Linearity with EPS	mm (in)	±0.01 (±0.0004)

Position-Time Diagram

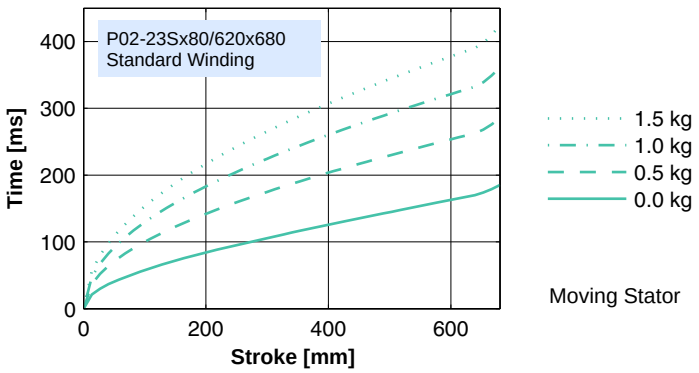

Stator

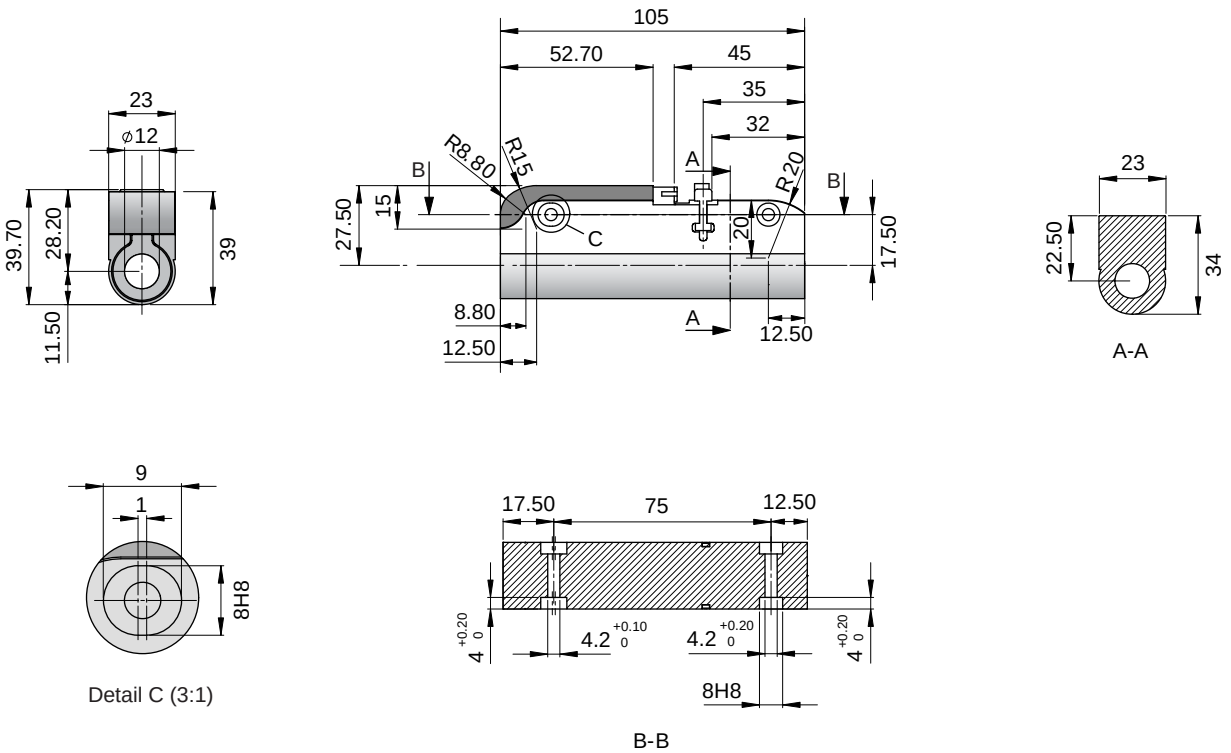

Linear Motor		Stator			Slider	
Type	Art.No	Type	Art. No.		Type	Art No.
P02-23Sx80/620x680	-->	PS02-23Sx80-F	0150-1272	&	PL01-12x760/710	0150-1366

Slider

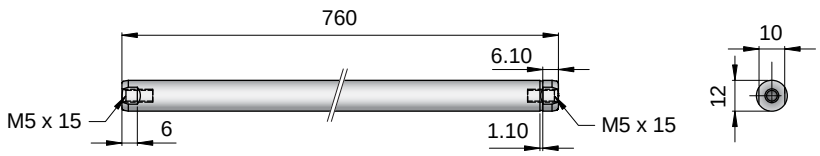

Standard Type	Slider Standard		PL01-12x760/710	0150-1366
Special Sliders	Heavy Duty Slider	with WC/C-Coating	PL02-12x760/710	on request
	Hollow Slider	hole diameter 4.2mm	PL01-12x760/710-L	0150-1392

Connectors

Motor connector Wiring

Pin 1	Phase 2-
Pin 2	Phase 2-
Pin 3	Phase 1-
Pin 4	Phase 1-
Pin 5	+5V
Pin 6	Temp
Pin 7	GND
Pin 8	Cosine
Pin 9	Sine
Pin 10	Phase 2+
Pin 11	Phase 2+
Pin 12	Phase 1+
Pin 13	Phase 1+

Accessoires

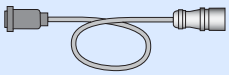

Standard Cable p. 508

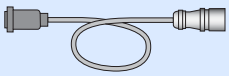

High Flex Cable p. 508

Servo Drive:
E100, E1001, E1100, B1100 p. 315

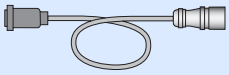

Robotic Cable p. 508

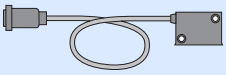

Optional Linear Encoder p. 526

Max. Stroke: 770mm
Peak Force: 44N

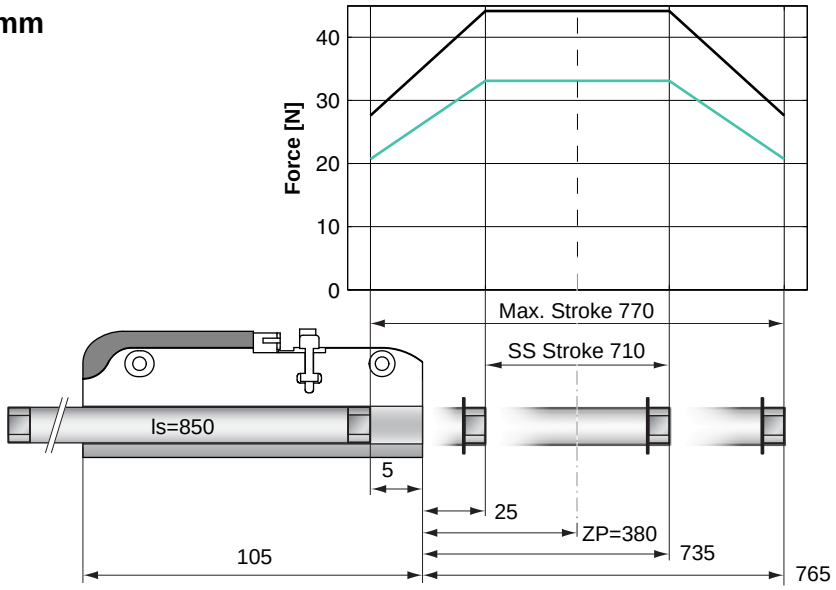

Standard Winding:
E1100, 72VDC &
E1001, 72VDC
E100, 48VDC

Dimensions in mm

Motor Specification

		P02-23Sx80/710x770
Extended Stroke ES	mm (in)	770 (30.31)
Standard Stroke SS	mm (in)	710 (27.95)
Peak Force E1100 / E1001	N (lbf)	44 (9.9)
Peak Force E100	N (lbf)	33 (7.4)
Cont. Force	N (lbf)	9 (2.0)
Cont. Force Fan cooling	N (lbf)	16 (3.7)
Border Force	%	63
Force Constant	N/A (lbf/A)	11.0 (2.48)
Max. Current @ 72VDC	A	4.0
Max. Current @ 48VDC	A	3.8
Max. Velocity @ 72VDC	m/s (in/s)	6.0 (236)
Max. Velocity @ 48VDC	m/s (in/s)	4.0 (157)
Phase Resist. 25/80 °C	Ohm	10.3/12.5
Phase Inductance	mH	1.4
Thermal Resistance	°K/W	7.0
Thermal Time Const.	sec	900
Stator Diameter	mm (in)	23 (0.91)
Stator Length	mm (in)	105 (4.13)
Stator Mass	g (lb)	245 (0.54)
Slider Diameter	mm (in)	12 (0.47)
Slider Length	mm (in)	850 (33.46)
Slider Mass	g (lb)	690 (1.52)
Position Repeatability	mm (in)	±0.05 (±0.0020)
Linearity	%	±0.20
Repeatability with EPS	mm (in)	±0.01 (±0.0004)
Linearity with EPS	mm (in)	±0.01 (±0.0004)

Position-Time Diagram

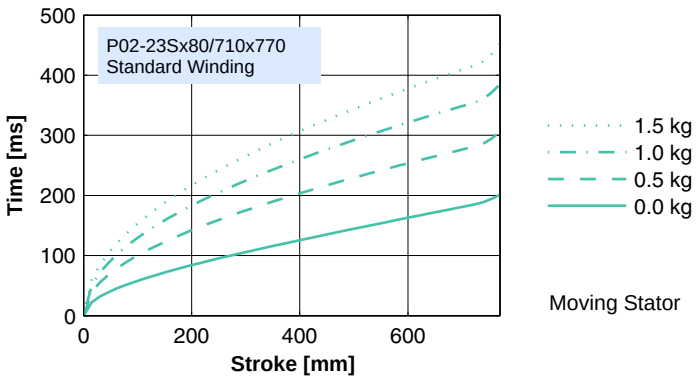

Stator

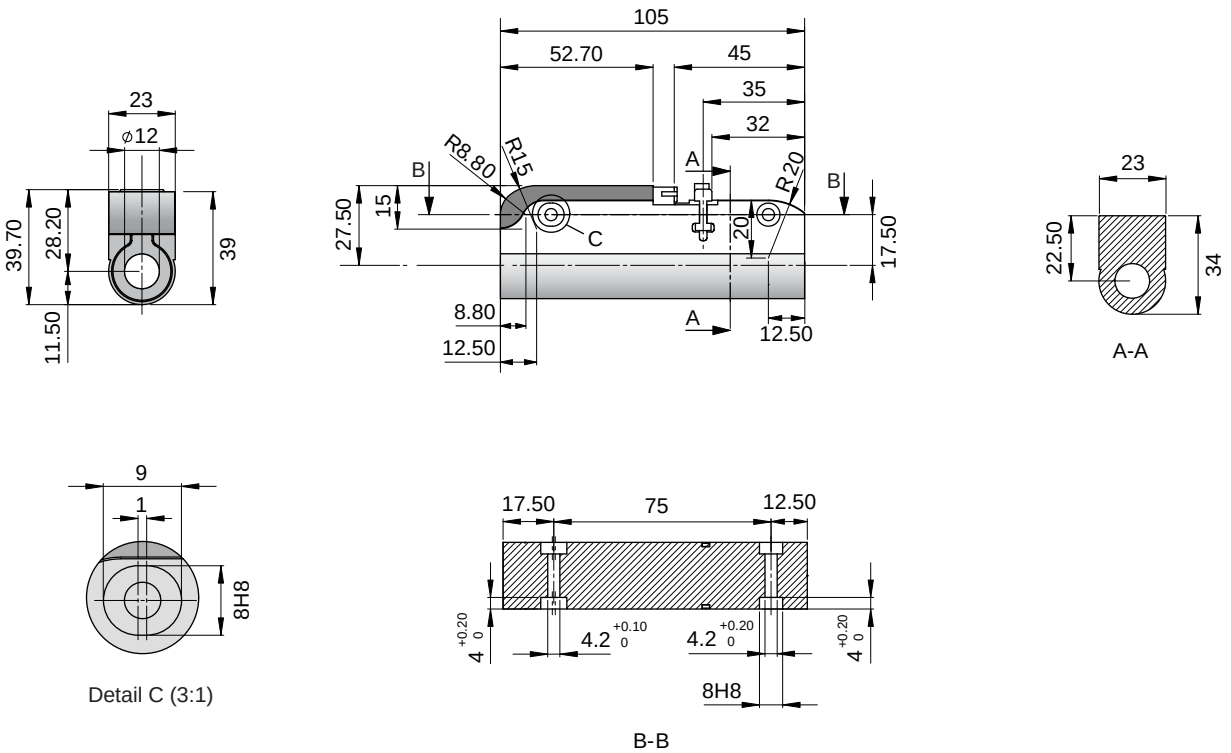

Linear Motor		Stator			Slider	
Type	Art.No	Type	Art. No.		Type	Art No.
P02-23Sx80/710x770	-->	PS02-23Sx80-F	0150-1272	&	PL01-12x850/800	0150-1365

Slider

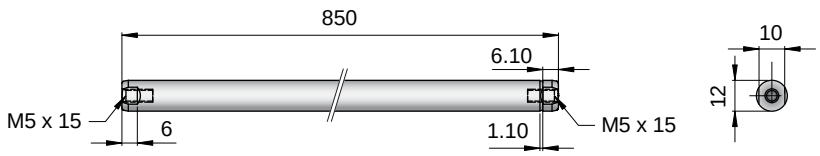

Standard Type	Slider Standard		PL01-12x850/800	0150-1365
Special Sliders	Heavy Duty Slider	with WC/C-Coating	PL02-12x850/800	on request
	Hollow Slider	hole diameter 4.2mm	PL01-12x850/800-L	on request

Connectors

Motor connector Wiring	
Pin 1	Phase 2-
Pin 2	Phase 2-
Pin 3	Phase 1-
Pin 4	Phase 1-
Pin 5	+5V
Pin 6	Temp
Pin 7	GND
Pin 8	Cosine
Pin 9	Sine
Pin 10	Phase 2+
Pin 11	Phase 2+
Pin 12	Phase 1+
Pin 13	Phase 1+

Accessoires

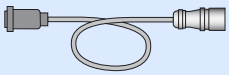

Standard Cable p. 508

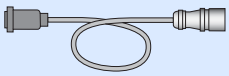

High Flex Cable p. 508

Servo Drive:
E100, E1001, E1100, B1100 p. 315

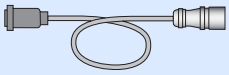

Robotic Cable p. 508

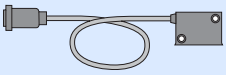

Optional Linear Encoder p. 526