TTA-C3(G)-50-45 Tabletop Robot Cantilever Type 3-axis Specification X-axis: 500mm, Y-axis: 450mm, Z-axis: 100mm/150mm

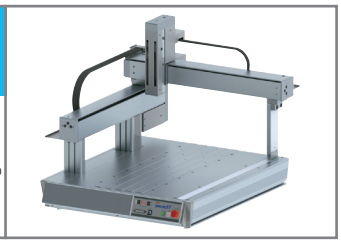

Model Specification Items

TTA – □ – I – 50 □ – 45 □ – □ □ – □ - □ - □ - □ — □ — □

- **Series**: TTA
- **Type**: C3: 3-axis standard specification (Cantilever type); C3G: 3-axis global specification (Cantilever type)
- **Encoder type**: I: Incremental specification
- **X-axis stroke**: 50: 500mm
- **X-axis option**
- **Y-axis stroke**: 45: 450mm
- **Y-axis option**: HS: Home confirmation sensor; NM: Non-motor side specification
- **Z-axis stroke**: 10: 100mm; 15: 150mm
- **Z-axis option**: B: Brake (Standard); HS: Home confirmation sensor; NM: Non-motor side specification
- **Standard I/O slot**: NP: NPN specification; PN: PNP specification
- **Expansion I/O slot 1**, **Expansion I/O slot 2**: Refer to the expansion I/O slot table below. * If the expansion I/O slot is not used, enter "E."
- **I/O cable length**: 0: None; 2: 2m; 3: 3m; 5: 5m
- **Power supply cable specification**: PU: Mating plug (No cable); 1: Power supply cable for AC100V (2m); 2: Power supply cable for AC200V (2m)
- **Option**: Refer to P. 6

* Refer to P. 6 for the details of model specification items.

Model/Specifications

Model number	Axis configuration	Encoder type	Motor type	Lead (mm)	Stroke (mm)	Speed (mm/sec)	Payload (kg) (Note 1)
TTA-C3(G)-I-50①-45②-③B④-⑤-⑥-⑦-⑧-⑨-⑩	X-axis	Incremental	Pulse motor	24 or equiv.	500	1~800	–
	Y-axis			24 or equiv.	450	1~800	–
	Z-axis			12	100/150	1~400	6

* In the above model number, ① and ② indicate the XY-axis options, ③ indicates the Z-axis stroke, ④ indicates the Z-axis option(s), ⑤ indicates the standard I/O slot, ⑥ and ⑦ indicate the expansion I/O slots, ⑧ indicates the I/O cable length, ⑨ indicates the power supply cable specification, and ⑩ indicates the selected option(s).

Expansion I/O Slot

Name	Model	Standard price
Not used	E	–
Expansion PIO board (NPN specification)	NP	–
Expansion PIO board (PNP specification)	PN	–
DeviceNet connection board	DV	–
CC-Link connection board	CC	–
PROFIBUS-DP connection board	PR	–
EtherNet/IP connection board	EP	–

Common Specifications

Drive system	X/Y/Z-axis ballscrew (X/Y-axis: ø12mm, Z-axis: ø10mm, rolled C10) X-axis and Y-axis speeds increased at 1.5:1 using a timing belt
Positioning repeatability	±0.02mm (Note 2)
Lost motion	0.1mm or less
Guide	Ball-circulation type linear guide
Dynamic allowable moment (Note 3)	X-axis: Ma: 12.6Nm Mb: 12.6Nm Mc: 37.4Nm Z-axis: Ma: 9.7Nm Mb: 9.7Nm Mc: 20.5Nm
Ambient temperature/humidity	0 to 40°C, 85% RH max. (non-condensing)
Loadable weight on table	100kg
Actuator weight	51kg

Dimensions

You can download CAD drawings from our website.

2D CAD RoHS

* Refer to P. 7 for dimensions of T-groove.
* During home return, the slider moves to the ME, so be careful to prevent contact with surrounding parts.

SE: Stroke end
ME: Mechanical end

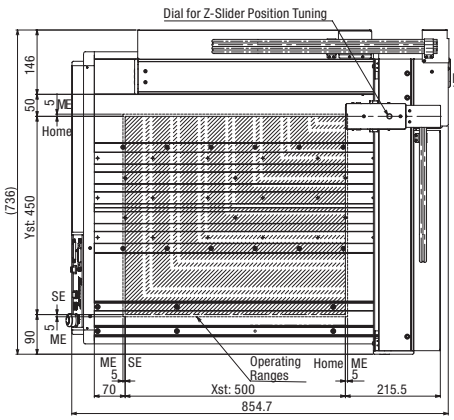

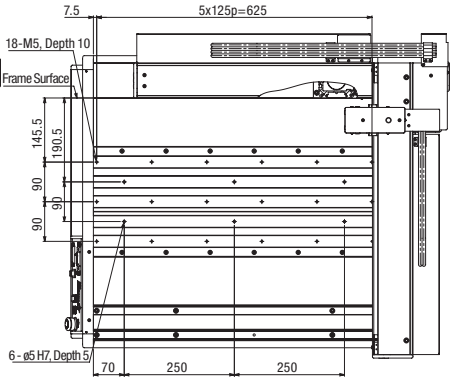

View for Top Base Hole Allocation

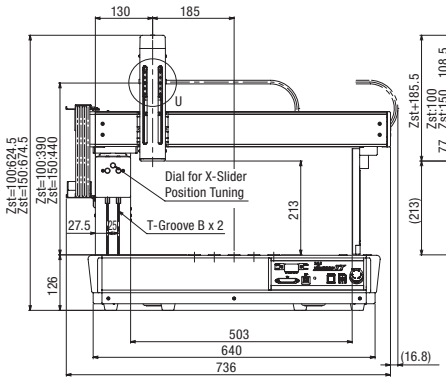

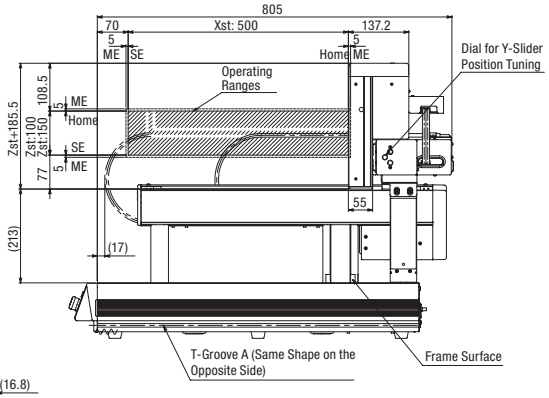

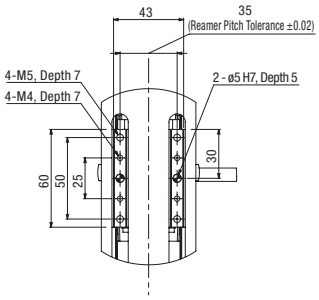

Detailed Diagram U (Detail of Z-axis Slider)

Applicable Controller Specifications

Applicable controller	Maximum number of controlled axes	Encoder type	Method of operation	Power-supply voltage	Page
Built-in	3 axes	Incremental	Program	AC100V AC200V	→ P. 28

Caution

(Note 1) The maximum speed cannot be achieved based on the maximum payload setting. The payload decreases when the speed is increased. Also note that the maximum acceleration/deceleration varies depending on the payload. (Refer to P. 37.)

(Note 2) It is limited to when the actuator temperature is constant. It does not guarantee the absolute accuracy.

(Note 3) The dynamic allowable moment is a value of each axis assuming a traveling life of 5,000km. (Refer to P. 7 for the dynamic allowable moment.)